RF CHARACTERISTICS

Number of ways	: **3**
Frequency range	: **0 - 18 GHz**
Impedance	: **50 Ohms**

Frequency (GHz)	**DC - 3**	**3 - 8**	**8 - 12.4**	**12.4 - 18**
VSWR max	**1.20**	**1.30**	**1.40**	**1.50**
Insertion loss max	**0.20 dB**	**0.30 dB**	**0.40 dB**	**0.50 dB**
Isolation min	**80 dB**	**70 dB**	**60 dB**	**60 dB**
Average power (*)	**240 W**	**150 W**	**120 W**	**100 W**

ELECTRICAL CHARACTERISTICS

Actuator		: **LATCHING**
Nominal current **		: **125 mA / RESET : 375 mA ******
Actuator voltage (Vcc)		: **28V (24 to 30V)**
Terminals		: **25 pins D-SUB male connector**
Indicator rating		: **1 W / 30 V / 100 mA**
TTL inputs (E)	- High level	: **2.2 to 5.5 V / 800µA at 5.5 V**
	- Low level	: **0 to 0.8 V / 20µA at 0.8 V**

MECHANICAL CHARACTERISTICS

Connectors	: **SMA female per MIL-C 39012**
Life	: **5 million cycles per position**
Switching Time***	: **< 15 ms**
Construction	: **Splashproof**
Weight	: **< 220 g**

ENVIRONMENTAL CHARACTERISTICS

Operating temperature range	: **-40°C to +85°C**
Storage temperature range	: **-55°C to +85°C**

(* Average power at 25°C per RF Path)
(** At 25° C ±10%)
(*** Nominal voltage ; 25° C)
(**** Reset : supply voltage time 1sec. max. / duty cycle 10%)

This document contains proprietary information and such information shall not be disclosed to any third party for any purpose whatsoever or used for manufacturing purposes without prior written agreement from Radiall. The data defined in this document are given as an indication, in the effort to improve our products; we reserve the right to make any changes judged necessary.

DRAWING

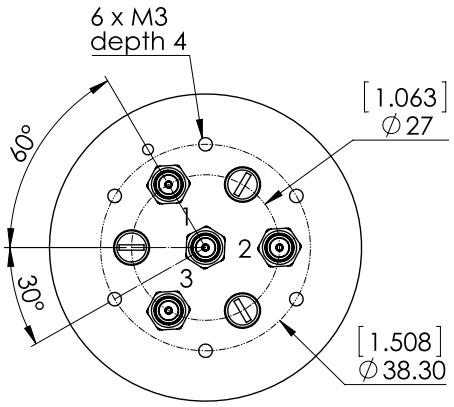

TTL input	RF Continuity	Ind.
RESET = 1	All ports open	- -
E1 = 1	IN ↔ 1	D.E
E2 = 1	IN ↔ 2	D.F
E3 = 1	IN ↔ 3	D.G

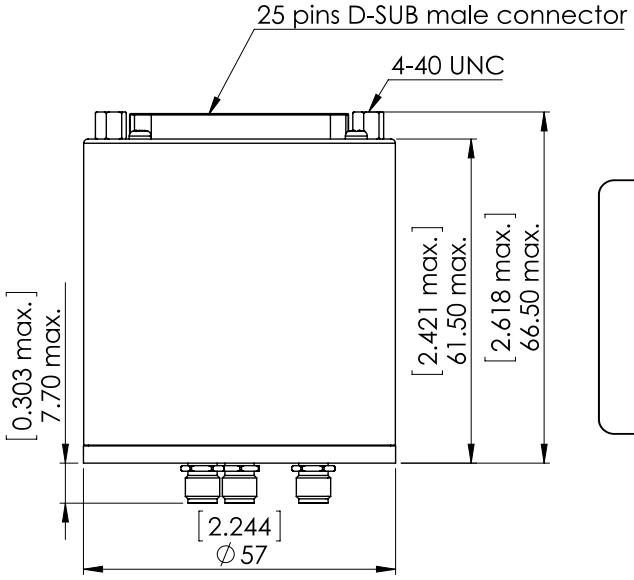

General tolerances : ±0,5 mm [0,02 in]

LABEL

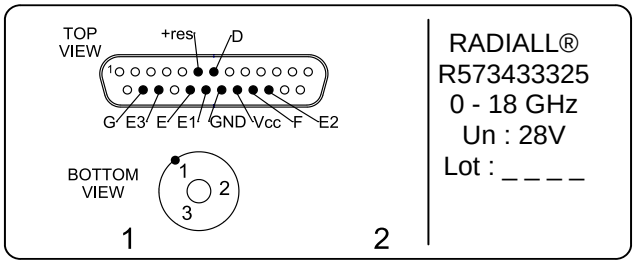

SCHEMATIC DIAGRAM

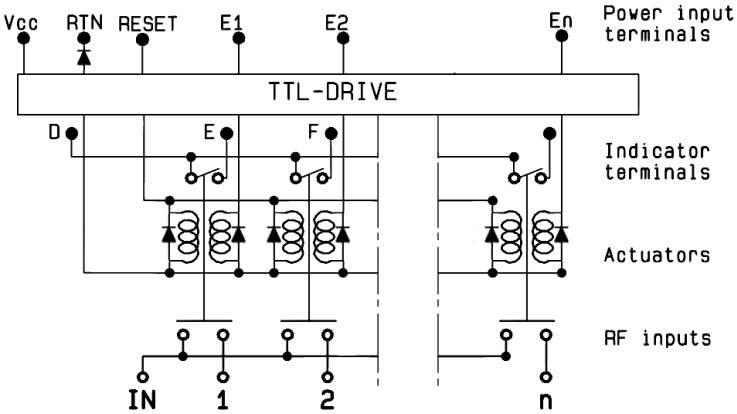

This document contains proprietary information and such information shall not be disclosed to any third party for any purpose whatsoever or used for manufacturing purposes without prior written agreement from Radiall. The data defined in this document are given as an indication, in the effort to improve our products; we reserve the right to make any changes judged necessary.