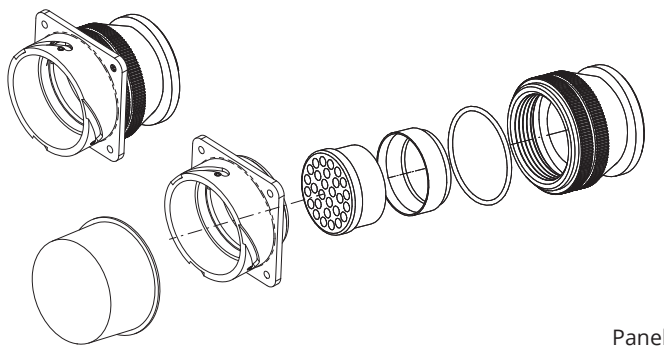

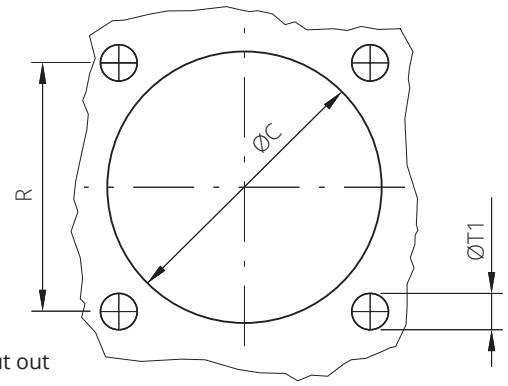

Panel cut out

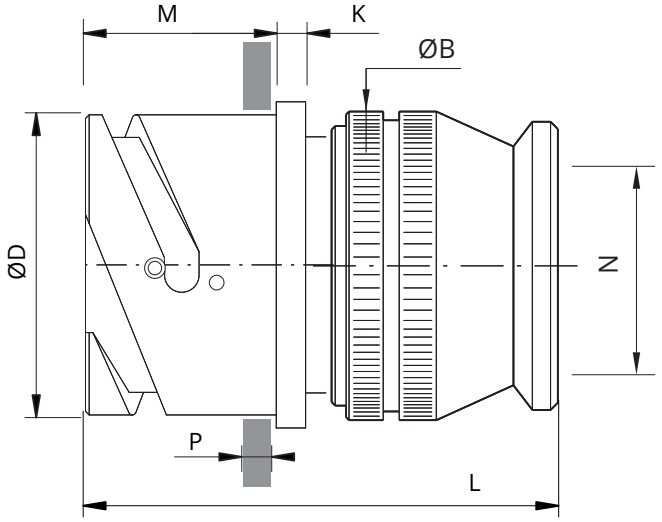

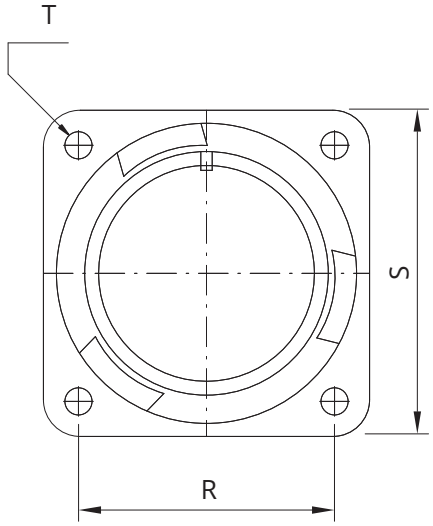

Shell size	ØD +0 -0.15	ØB ±0.2	L	K ±0.2	M ±0.2	N max cable dimension	R ±0.1	S ±0.3	ØT	ØT1	ØC ±0.2	P Panel Thickness Max
10SL	18.2	20	46	2.8	18.2	10	18.2	25.4	M4	4.5	19.1	6
14S	24.6	24	47	3.2	18.6	13.5	23	30.2	M4	4.5	25.5	7.2
16S	27.4	27	47	3.2	18.6	16.1	24.6	32.5	M4	4.5	28.3	7.2
16	27.4	27	54	3.2	23.05	16.5	24.6	32.5	M4	4.5	28.3	5.35
18	30.8	29.4	55	4	23.4	19	27	34.9	M4	4.5	31.7	7.25
20	34.2	32	55	4	23.4	22.2	29.4	38.1	M4	4.5	35	7.3
22	37.4	37	57	4	23.4	24.5	31.8	41	M4	4.5	38.3	7.3
24	40.9	40	57	4	23.4	28	34.9	44.5	M4	4.5	41.8	6.85
28	46.7	45	64	4	24.4	32.6	39.7	50.8	M5	5.5	47.6	7.8
32	53.4	52	64	4	24.4	38	44.5	57	M5	5.5	54.3	7.5
36	**59.6**	**58**	**64**	**4**	**24.4**	**45**	**49.2**	**63.5**	**M5**	**5.5**	**60.5**	**7.5**
40	65.5	63.2	64	4	24.4	51.3	55.6	69.8	M5	5.5	66.4	7.5

Dimensions in mm

Dimension "L" can be different from the value indicated according to backshells accessories, wires size and some special insert configurations.

This document contains proprietary information and such information shall not be disclosed to any third party for any purpose whatsoever or used for manufacturing purposes without prior written agreement from Radiall. The data defined in this document are given as an indication, in the effort to improve our products; we reserve the right to make any changes judged necessary.

Inserts

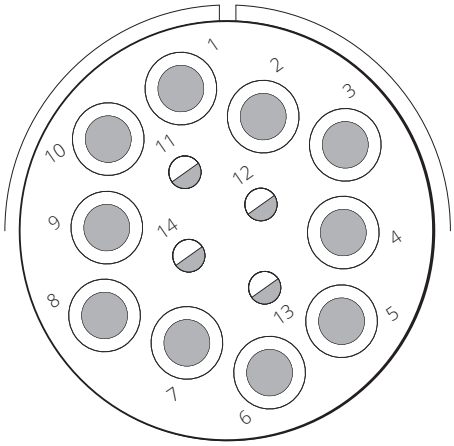

Arrangement	36D78
Gender	Socket
No. of contacts	14
Contacts size	N° 4 x #16 (22A Max)
	N° 10 x #8 (73A Max)
Service Rating	D (1250Vdc - 900Vac)
Rotation	W (35°)

Contacts P/N	Qty	Size	Termination	mm² section	AWG section	Stripping length mm	Manual crimp tool	Crimp Die / Locator	Insertion tool	Removal tool	Guide pin
-	-	-	-	-	-	-	-	-	-	-	-

Grommet *

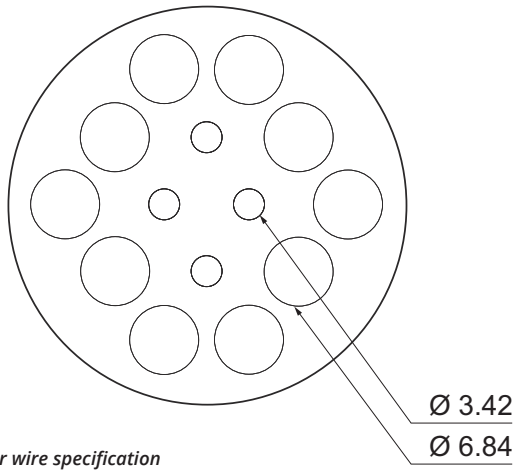

** Consult our sales office for wire specification*

This document contains proprietary information and such information shall not be disclosed to any third party for any purpose whatsoever or used for manufacturing purposes without prior written agreement from Radiall. The data defined in this document are given as an indication, in the effort to improve our products; we reserve the right to make any changes judged necessary.

Code details

Insert material	RF	Fire behaviour (fire and smoke) complying with EN 45545-2, NFPA130 (ASTME162, ASTME662, BSS7239)
Series	CVBS	Bayonet connector with protected mating ramps
Shell material	_	Aluminum alloy
Shell Type	030	Rear mounting receptacle connector with thread to accept backshells
Connector Class	R	Shortened backshell suitable to connect single wires, provided with grommet and cone
Accessories	T	Plastic protection cap
Accessories	_	-
Accessories	_	-
Insert	36D78	Arrangement 36D78
Gender Contacts	S	Socket
Polarization	W	W (35°)
Backshell Details	_	-
Contacts Termination	LC	Less contacts (to be purchased separately)
Contact Plating	_	-
Shell Finish	F26	Hard black anodize
Panel Gasket	G	Panel gasket
Contact modification code	_	-
Customization	_	-

** The creepage distance is reduced for the insert with contacts for larger wires than the standard ones.*
The contacts with reduced ØD for smaller wire may be a sealing problem with grommets.
The contacts with enlarged ØD for larger wires may be difficulties with grommets.
Please contact our sales office.

This document contains proprietary information and such information shall not be disclosed to any third party for any purpose whatsoever or used for manufacturing purposes without prior written agreement from Radiall. The data defined in this document are given as an indication, in the effort to improve our products; we reserve the right to make any changes judged necessary.

Shell type:
Bayonet connector with protected mating ramps
Rear mounting receptacle connector with thread to accept backshells

Reference Documents:
- Mil-DTL-5015 (where applicable)
- VG 95234 (where applicable)
- EN 60529
- EN45545-2, NFPA130 (ASTME162, ASTME662, BSS7239)
- European Directive 2011/65/UE (RoHS)

General features:
Arrangement: 36D78; Socket; the insert is supplied with rotation: W (35°)
Contact: n.10 size 8; n.4 size 16; Less contacts (to be purchased separately)

Operating Temperature: -55 ÷ +150°C
IP Protection degree according EN60529: IP67 or IP68 (10meters 12hours, according to the application, connector series and shell type)
Insulating rubber parts: Fire behaviour (fire and smoke) complying with EN 45545-2, NFPA130 (ASTME162, ASTME662, BSS7239)

Connector supplied with:
- Shortened backshell suitable to connect single wires, provided with grommet and cone
- Plastic protection cap
- Panel gasket

Electrical specifications:
Nominal Voltage: 1250 Vdc / 900 Vac (service D)
Test Voltage: 2800 Vac

Current Rating, single contact:
- maximum current: 73A (#8) 22A (#16) with ambient temperature 20°C
- rated current: 46A (#8) 13A (#16) with ambient temperature 80°C

** The creepage distance is reduced for the insert with contacts for larger wires than the standard ones.*
The contacts with reduced ØD for smaller wire may be a sealing problem with grommets.
The contacts with enlarged ØD for larger wires may be difficulties with grommets.
Please contact our sales office.

COMPONENTS	MATERIALS	PLATING / FINISHES
Shells	Aluminum alloy	Hard black anodize
Insulating	Fire behaviour * (fire and smoke)	-
Contacts	-	-
Panel Gasket	Chloroprene rubber *	-
Others part	-	-

** Insulating Class parts: fire behaviour (fire and smoke) complying with EN 45545-2 Par. 4.3.1 (< 10 g), NFPA130 Par. 8.4.1.10 (< 100 cm²)*

ACCESSORIES (included)

P/N	Description	Quantity
C216-36	Panel gasket	1
-	-	-
-	-	-

PACKAGING

Quantity	Type	Weight
1	Plastic Bags	-
-	Carton Box	-

This document contains proprietary information and such information shall not be disclosed to any third party for any purpose whatsoever or used for manufacturing purposes without prior written agreement from Radiall. The data defined in this document are given as an indication, in the effort to improve our products; we reserve the right to make any changes judged necessary.