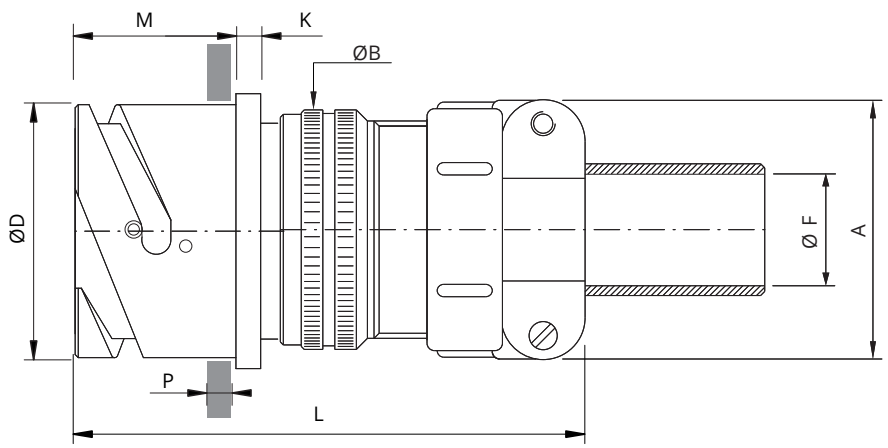

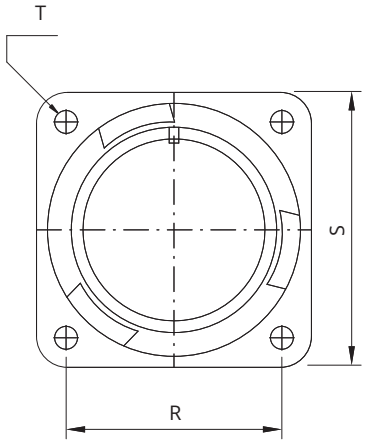

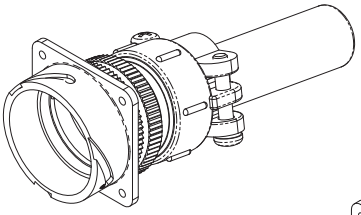

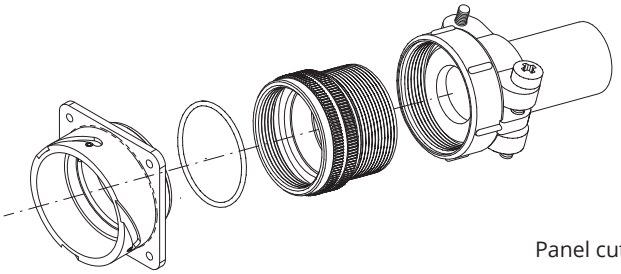

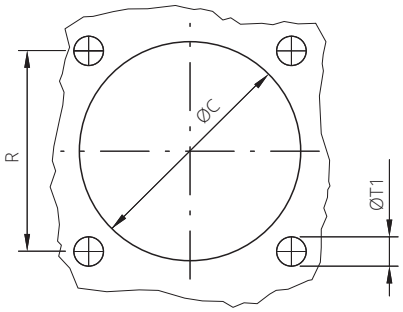

Panel cut out

Shell size	ØD +0 -0.15	ØB ±0.2	L	M ±0.2	K ±0.2	A max	ØF cable max dimension	R ±0.1	S ±0.3	ØT	ØT1	ØC ±0.2	P Panel Thickness Max
10SL	18.2	20	56	18.2	2.8	22.5	5.6	18.2	25.4	M4	4.5	19.1	6
14S	**24.6**	**24**	**59.5**	**18.6**	**3.2**	**28**	**7.9**	**23**	**30.2**	**M4**	**4.5**	**25.5**	**7.2**
16S	27.4	27	61	18.6	3.2	30	11	24.6	32.5	M4	4.5	28.3	7.2
16	27.4	27	68	23.05	3.2	30	11	24.6	32.5	M4	4.5	28.3	5.35
18	30.8	30	71	23.4	4	31.7	14.2	27	34.9	M4	4.5	31.7	7.25
20	34.2	32	71	23.4	4	37.5	15.8	29.4	38.1	M4	4.5	35	7.3
22	37.4	37	73.5	23.4	4	37.5	15.8	31.8	41	M4	4.5	38.3	7.3
24	40.9	40	73.5	23.4	4	43.5	19	34.9	44.5	M4	4.5	41.8	6.85
28	46.7	45	80.5	24.4	4	43.5	19	39.7	50.8	M5	5.5	47.6	7.8
32	53.4	52	80.5	24.4	4	51.7	23.8	44.5	57	M5	5.5	54.3	7.5
36	59.6	58	81	24.4	4	58.5	31.7	49.2	63.5	M5	5.5	60.5	7.5
40	65.5	63.2	94	24.4	4	68.5	34.9	55.6	69.8	M5	5.5	66.4	7.5

Dimensions in mm

Dimension "L" can be different from the value indicated according to backshells accessories, wires size and some special insert configurations.

This document contains proprietary information and such information shall not be disclosed to any third party for any purpose whatsoever or used for manufacturing purposes without prior written agreement from Radiall. The data defined in this document are given as an indication, in the effort to improve our products; we reserve the right to make any changes judged necessary.

Inserts

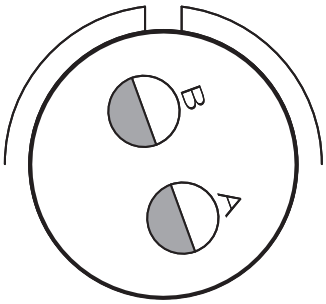

Arrangement	14S-9
Gender	Pin
No. of contacts	2
Contacts size	N° 2 x #16S (22A Max)
Service Rating	A (700Vdc - 500Vac)
Rotation	W (70°)

Contacts P/N	Qty	Size	Termination	mm² section	AWG section	Stripping length mm	Manual crimp tool	Crimp Die / Locator	Insertion tool	Removal tool	Guide pin
ST485 16SP CD5	2	16S	crimp	1÷1.5	18÷16	6.3	CRT-784/1	LOC-784	CTIN-784-16	CTES-784-16	GP-784-16

This document contains proprietary information and such information shall not be disclosed to any third party for any purpose whatsoever or used for manufacturing purposes without prior written agreement from Radiall. The data defined in this document are given as an indication, in the effort to improve our products; we reserve the right to make any changes judged necessary.

Code details

Insert material	RF	Fire behaviour (fire and smoke) complying with EN 45545-2, NFPA130 (ASTME162, ASTME662, BSS7239)
Series	CVBS	Bayonet connector with protected mating ramps
Shell material	_	Aluminum alloy
Shell Type	030	Rear mounting receptacle connector with thread to accept backshells
Connector Class	AF	Standard backshell, MS3057..A type cable-clamp and bushing MS 3420.. (single wire)
Accessories	_	-
Accessories	_	-
Accessories	_	-
Insert	14S-9	Arrangement 14S-9
Gender Contacts	P	Pin
Polarization	W	W (70°)
Backshell Details	_	-
Contacts Termination	CR	Crimp
Contact Plating	CD5	Nickel + gold 0.4 µ min
Shell Finish	F7	Black epoxy-polyurethane varnish (non conductive), RoHS compliant
Panel Gasket	G	Panel gasket
Contact modification code	_	-
Customization	_	-

This document contains proprietary information and such information shall not be disclosed to any third party for any purpose whatsoever or used for manufacturing purposes without prior written agreement from Radiall. The data defined in this document are given as an indication, in the effort to improve our products; we reserve the right to make any changes judged necessary.

Shell type:
Bayonet connector with protected mating ramps
Rear mounting receptacle connector with thread to accept backshells

Reference Documents:
- SAE AS 50151 (ex MIL-C-5015 where applicable)
- VG 95234 (where applicable)
- EN 60529
- EN45545-2, NFPA130 (ASTME162, ASTME662, BSS7239)
- European Directive 2011/65/UE (RoHS)

General features:
Arrangement: 14S-9; Pin; the insert is supplied with rotation: W (70°)
Contact: n.2 size 16S; Crimp

Operating Temperature: -55 ÷ +150°C
IP Protection degree according EN60529: IP67 or IP68 (10meters 12hours, according to the application, connector series and shell type)
Insulating rubber parts: Fire behaviour (fire and smoke) complying with EN 45545-2, NFPA130 (ASTME162, ASTME662, BSS7239)

Connector supplied with:
- Standard backshell, MS3057..A type cable-clamp and bushing MS 3420.. (single wire)
- Panel gasket

Electrical specifications:
Nominal Voltage: 700 Vdc / 500 Vac (service A)
Test Voltage: 2000 Vac

Current Rating, single contact:
- maximum current: 22A (#16S) with ambient temperature 20°C
- rated current: 13A (#16S) with ambient temperature 80°C

COMPONENTS	MATERIALS	PLATING / FINISHES
Shells	Aluminum alloy	Black epoxy-polyurethane varnish (non conductive), RoHS compliant
Insulating	Fire behaviour (fire and smoke)	-
Contacts	Copper alloy	Nickel + gold 0.4 µ min
Panel Gasket	Chloroprene rubber *	-
Others part	-	-

** Insulating rubber parts: fire behaviour (fire and smoke) complying with EN 45545-2 Par. 4.3.1 (< 10 g), NFPA130 Par. 8.4.1.10 (< 100 cm²)*

ACCESSORIES (included)

P/N	Description	Quantity
C216-14	Panel gasket	1
-	-	-
-	-	-

PACKAGING

Quantity	Type	Weight
1	Plastic Bags	-
-	Carton Box	-

This document contains proprietary information and such information shall not be disclosed to any third party for any purpose whatsoever or used for manufacturing purposes without prior written agreement from Radiall. The data defined in this document are given as an indication, in the effort to improve our products; we reserve the right to make any changes judged necessary.