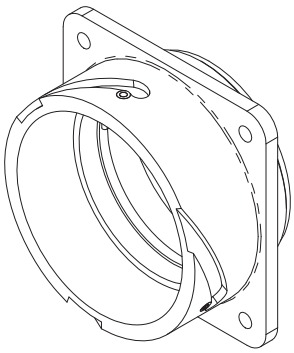

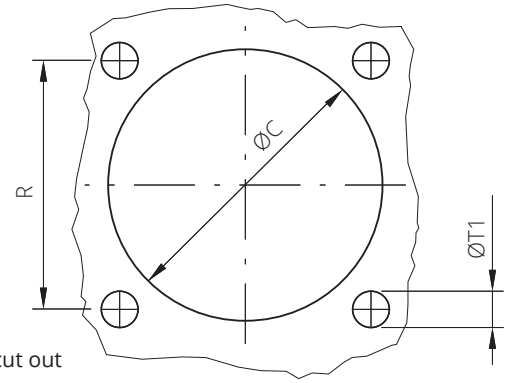

Panel cut out

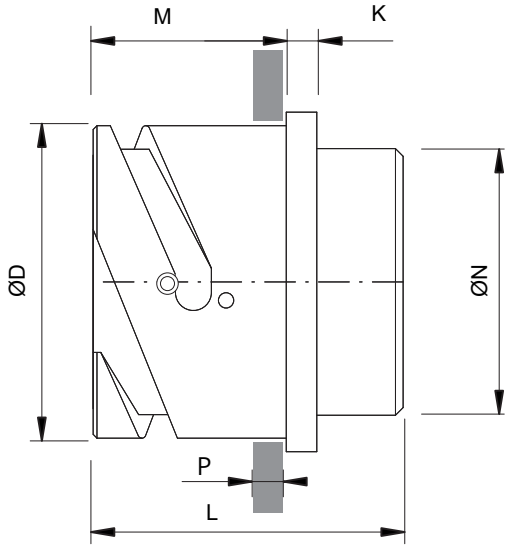

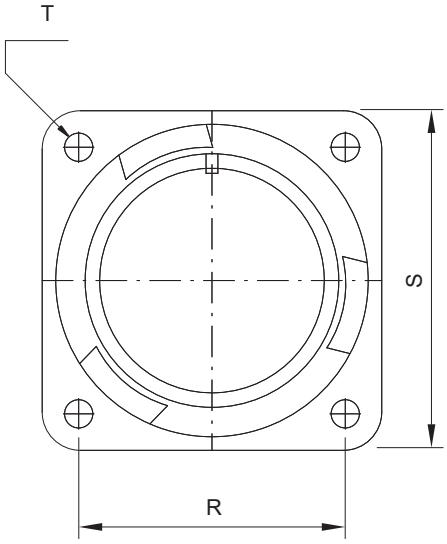

Shell size	ØD +0 -0.15	L	K ±0.2	M ±0.2	ØN Max	R ±0.1	S ±0.3	ØT	ØT1	ØC ±0.2	P Panel Thickness Max
10SL	18.2	30	2.8	18.2	16.1	18.2	25.4	M4	4.5	19.1	6
14S	24.6	30	3.2	18.6	19.2	23	30.2	M4	4.5	25.5	7.2
16S	27.4	30	3.2	18.6	22.5	24.6	32.5	M4	4.5	28.3	7.2
16	27.4	38.8	3.2	23.05	22.4	24.6	32.5	M4	4.5	28.3	5.35
18	30.8	38.5	4	23.4	25.6	27	34.9	M4	4.5	31.7	7.25
20	**34.2**	**39.1**	**4**	**23.4**	**28.8**	**29.4**	**38.1**	**M4**	**4.5**	**35**	**7.3**
22	37.4	39.3	4	23.4	32.2	31.8	41	M4	4.5	38.3	7.3
24	40.9	38.8	4	23.4	35.3	34.9	44.5	M4	4.5	41.8	6.85
28	46.7	39.1	4	24.4	41.5	39.7	50.8	M5	5.5	47.6	7.8
32	53.4	38.4	4	24.4	47.8	44.5	57	M5	5.5	54.3	7.5
36	59.6	39.9	4	24.4	52.6	49.2	63.5	M5	5.5	60.5	7.5
40	65.5	38.5	4	24.4	59.2	55.6	69.8	M5	5.5	66.4	7.5

Dimensions in mm

Dimension "L" can be different from the value indicated according to backshells accessories, wires size and some special insert configurations.

This document contains proprietary information and such information shall not be disclosed to any third party for any purpose whatsoever or used for manufacturing purposes without prior written agreement from Radiall VanSystem S.r.l. The data defined in this document are given as an indication, in the effort to improve our products; we reserve the right to make any changes judged necessary.

Inserts

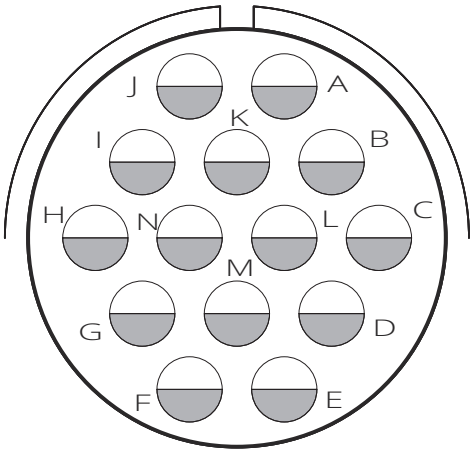

Arrangement	20-7
Gender	Pin
No. of contacts	8
Contacts size	N° 8 x #16 (22A Max)
Service Rating	A,B,H,G=D - Bal.=A
	A,B,H,G=1250 Vdc - Bal.=700Vdc
	A,B,H,G=900 Vac - Bal.=500Vac
Rotation	N (0°)

Contacts P/N	Qty	Size	Termination	mm² section	AWG section	Stripping length mm	Manual crimp tool	Crimp Die / Locator	Insertion tool	Removal tool	Guide pin
-	-	-	-	-	-	-	-	-	-	-	-

This document contains proprietary information and such information shall not be disclosed to any third party for any purpose whatsoever or used for manufacturing purposes without prior written agreement from Radiall VanSystem S.r.l. The data defined in this document are given as an indication, in the effort to improve our products; we reserve the right to make any changes judged necessary.

Code details

Insert material	RF	Fire behaviour (fire and smoke) complying with EN 45545-2, NFPA130 (ASTME162, AST-ME662, BSS7239)
Series	CVBS	Bayonet connector with protected mating ramps
Shell material	_	Aluminum alloy
Shell Type	03	Rear mounting receptacle connector unable to accept rear accessories
Connector Class	_	No rear accessories
Accessories	_	-
Accessories	_	-
Accessories	_	-
Insert	20-7	Arrangement 20-7
Gender Contacts	P	Pin
Polarization	_	N (0°)
Backshell Details	_	-
Contacts Termination	LC	Less contacts (to be purchased separately)
Contact Plating	_	-
Shell Finish	F7	Black epoxy-polyurethane varnish (non conductive), RoHS compliant
Panel Gasket	_	-
Contact modification code	_	-
Customization	_	-

This document contains proprietary information and such information shall not be disclosed to any third party for any purpose whatsoever or used for manufacturing purposes without prior written agreement from Radiall VanSystem S.r.l. The data defined in this document are given as an indication, in the effort to improve our products; we reserve the right to make any changes judged necessary.

Shell type:
Bayonet connector with protected mating ramps
Rear mounting receptacle connector unable to accept rear accessories

Reference Documents:
- Mil-DTL-5015 (where applicable)
- VG 95234 (where applicable)
- EN 60529
- EN45545-2, NFPA130 (ASTME162, ASTME662, BSS7239)
- European Directive 2011/65/UE (RoHS)

General features:
Arrangement: 20-7; Pin; the insert is supplied with rotation: N (0°)
Contact: n.8 size 16; Less contacts (to be purchased separately)

Operating Temperature: -55 ÷ +150°C
IP Protection degree according EN60529 (mated connectors with adequate accessories): IP67 or IP68 (10meters 12hours, according to the application, connector series and shell type)
Insulating rubber parts: Fire behaviour (fire and smoke) complying with EN 45545-2, NFPA130 (ASTME162, ASTME662, BSS7239)

Connector supplied with:
- No rear accessories

Electrical specifications:
Nominal Voltage: A,B,H,G=1250 Vdc - Bal.=700 Vdc / A,B,H,G=900 Vac - Bal.=500 Vac (service A,B,H,G=D - Bal.=A)
Test Voltage: A,B,H,G=2800 Vac - Bal.=2000 Vac

Current Rating, single contact:
- maximum current: 22A (#16) with ambient temperature 20°C
- rated current: 13A (#16) with ambient temperature 80°C

COMPONENTS	MATERIALS	PLATING / FINISHES
Shells	Aluminum alloy	Black epoxy-polyurethane varnish (non conductive), RoHS compliant
Insulating	Fire behaviour (fire and smoke)	-
Contacts	-	-
Panel Gasket	-	-
Others part	-	-

ACCESSORIES (included)

P/N	Description	Quantity
-	-	-
-	-	-
-	-	-

PACKAGING

Quantity	Type	Weight
1	Plastic Bags	-
-	Carton Box	-

This document contains proprietary information and such information shall not be disclosed to any third party for any purpose whatsoever or used for manufacturing purposes without prior written agreement from Radiall VanSystem S.r.l. The data defined in this document are given as an indication, in the effort to improve our products; we reserve the right to make any changes judged necessary.