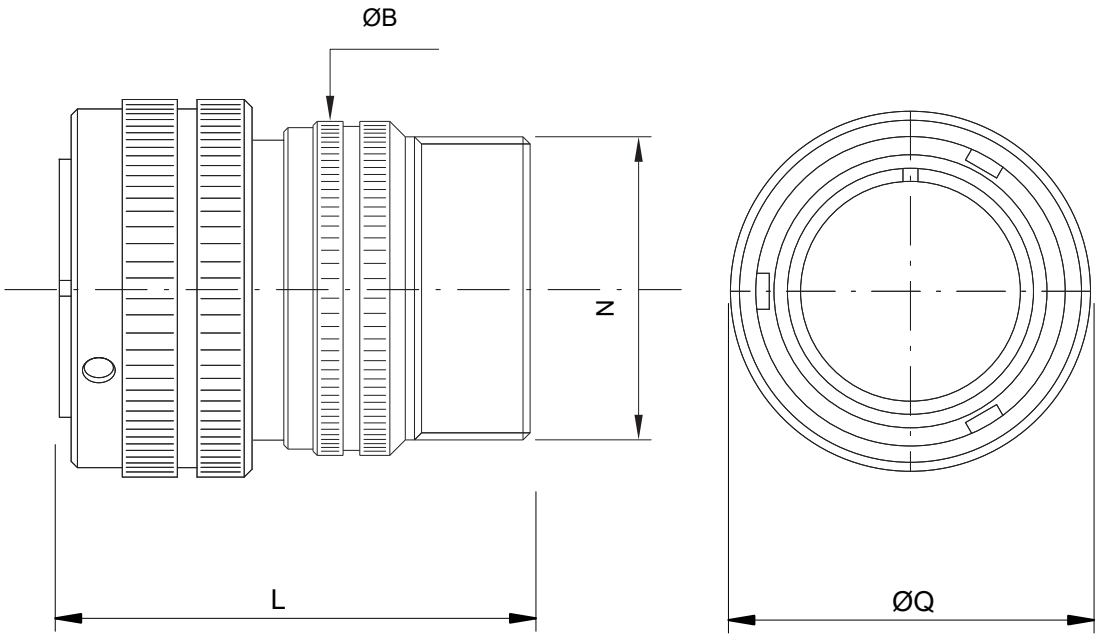

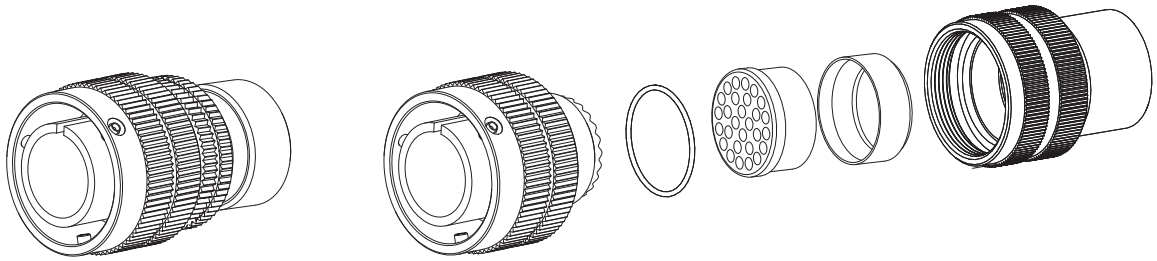

Shell size	ØQ ±0.2	ØB ±0.2	L max	N Backshell Thread in inches
10SL	23.3	20	36	5/8”-24 UNEF
14S	28.5	24	43	3/4”-20 UNEF
16S	31.8	27	43	7/8”-20 UNEF
16	31.8	27	49	7/8”-20 UNEF
18	**34.1**	**30**	**52**	**1”-20 UNEF**
20	37.3	32	52.5	1” 3/16-18 UNEF
22	40.5	37	55	1” 3/16-18 UNEF
24	43.5	40	55	1” 7/16-18 UNEF
28	50	45	62	1” 7/16-18 UNEF
32	56.1	52	62	1” 3/4-18 UNS
36	62.5	58	62	2”-18 UNS
40	69.1	63.8	64	2”1/4-16 UN

Dimensions in mm

Dimension “L” can be different from the value indicated according to backshells accessories, wires size and some special insert configurations.

This document contains proprietary information and such information shall not be disclosed to any third party for any purpose whatsoever or used for manufacturing purposes without prior written agreement from Radiall VanSystem S.r.l. The data defined in this document are given as an indication, in the effort to improve our products; we reserve the right to make any changes judged necessary.

Inserts

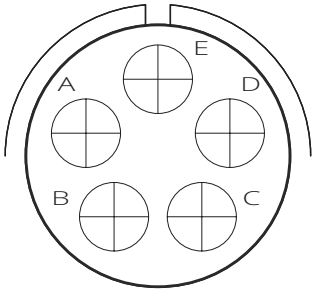

Arrangement	18-11
Gender	Socket
No. of contacts	5
Contacts size	N° 5 x #12 (41A Max)
Service Rating	A (700Vdc - 500Vac)
Rotation	N (0°)

Contacts P/N	Qty	Size	Termination	mm² section	AWG section	Stripping length mm	Manual crimp tool	Crimp Die / Locator	Insertion tool	Removal tool	Guide pin
-	-	-	-	-	-	-	-	-	-	-	-

Grommet *

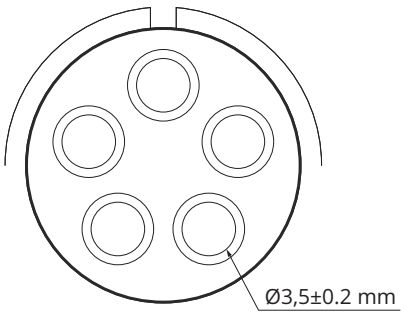

** Consult our sales office for wire specification*

This document contains proprietary information and such information shall not be disclosed to any third party for any purpose whatsoever or used for manufacturing purposes without prior written agreement from Radiall VanSystem S.r.l. The data defined in this document are given as an indication, in the effort to improve our products; we reserve the right to make any changes judged necessary.

Code details

Insert material	RF	Fire behaviour (fire and smoke) complying with EN 45545-2, NFPA130 (ASTME162, ASTME662, BSS7239)
Series	CVBS	Bayonet connector with protected mating ramps
Shell material	_	Aluminum alloy
Shell Type	06	Plug connector for straight backshell, with coupling nut
Connector Class	RA	Standard backshell having an external thread suitable for MS3057...A or C type cacle clamps, with waterproof O-ring, grommet and cone
Accessories	_	-
Accessories	_	-
Accessories	_	-
Insert	18-11	Arrangement 18-11
Gender Contacts	S	Socket
Polarization	_	N (0°)
Backshell Details:	_	-
Contacts Termination	LC	Less contacts (to be purchased separately)
Contact Plating	_	-
Shell Finish	F16	CCF black, conductive - RoHS compliant
Panel Gasket	_	-
Contact modification code	_	-
Customization	_	-

This document contains proprietary information and such information shall not be disclosed to any third party for any purpose whatsoever or used for manufacturing purposes without prior written agreement from Radiall VanSystem S.r.l. The data defined in this document are given as an indication, in the effort to improve our products; we reserve the right to make any changes judged necessary.

Shell type:
Bayonet connector with protected mating ramps
Plug connector for straight backshell, with coupling nut

Reference Documents:
- Mil-DTL-5015 (where applicable)
- VG 95234 (where applicable)
- EN 60529
- EN45545-2, NFPA130 (ASTME162, ASTME662, BSS7239)
- European Directive 2011/65/UE (RoHS)

General features:
Arrangement: 18-11; Socket; the insert is supplied with rotation: N (0°)
Contact: n.5 size 12; Less contacts (to be purchased separately)

Operating Temperature: -55 ÷ +150°C
Protection (mated connectors with adequate accessories): IP67
Insulating rubber parts: Fire behaviour (fire and smoke) complying with EN 45545-2, NFPA130 (ASTME162, ASTME662, BSS7239)

Connector supplied with:
- Standard backshell having an external thread suitable for MS3057...A or C type cacle clamps, with waterproof O-ring, grommet and cone

Electrical specifications:
Nominal Voltage: 700 Vdc / 500 Vac (service A)
Test Voltage: 2000 Vac

Current Rating, single contact:
- maximum current: 41A (#12) with ambient temperature 20°C
- rated current: 23A (#12) with ambient temperature 80°C

COMPONENTS	MATERIALS	PLATING / FINISHES	ACCESSORIES (included)		
Shells	Aluminum alloy	CCF black, conductive - RoHS compliant	-	-	-
Insulating	Fire behaviour * (fire and smoke)	-	-	-	-
Contacts	-	-	-	-	-
Panel Gasket	-	-			
Others part	-	-			

** Insulating Class parts: fire behaviour (fire and smoke) complying with EN 45545-2 Par. 4.3.1 (< 10 g), NFPA130 Par. 8.4.1.10 (< 100 cm²)*

PACKAGING		
Quantity	**Type**	**Weight**
1	Plastic Bags	-
-	Carton Box	-

This document contains proprietary information and such information shall not be disclosed to any third party for any purpose whatsoever or used for manufacturing purposes without prior written agreement from Radiall VanSystem S.r.l. The data defined in this document are given as an indication, in the effort to improve our products; we reserve the right to make any changes judged necessary.