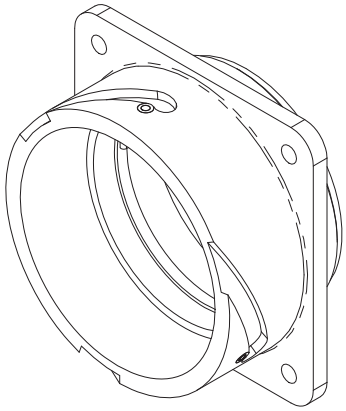

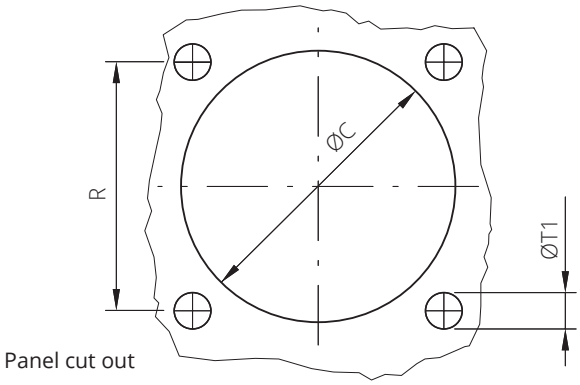

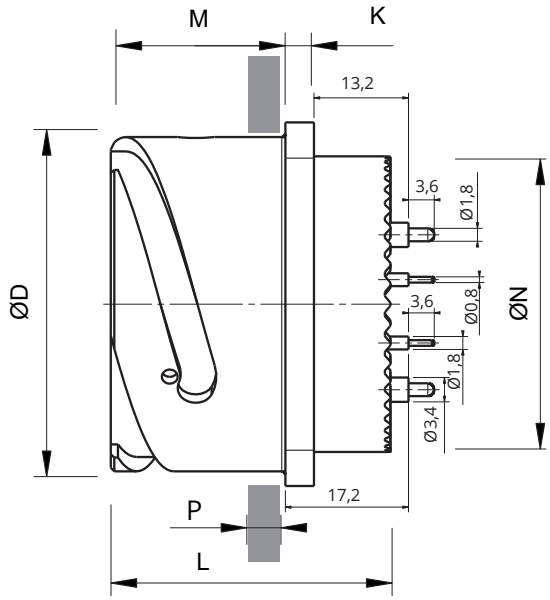

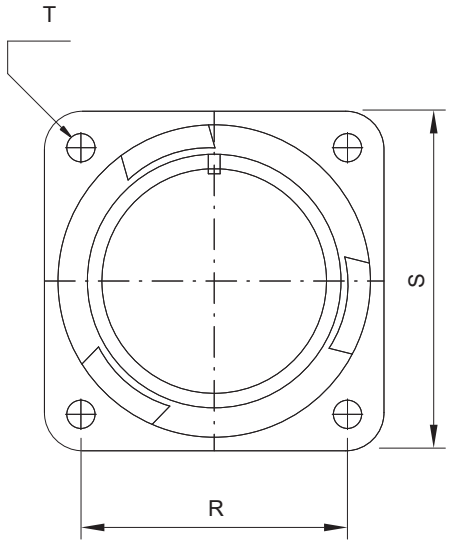

Shell size	ØD +0 -0.15	L	K ±0.2	M ±0.2	ØN Max	R ±0.1	S ±0.3	ØT ±0.2	ØT1 Threaded holes	ØC ±0.2	P Panel Thickness Max
10SL	18.2	30	2.8	18.2	16.1	18.2	25.4	M4	4.5	19.1	6
14S	24.6	30	3.2	18.6	19.2	23	30.2	M4	4.5	25.5	7.2
16S	27.4	30	3.2	18.6	22.5	24.6	32.5	M4	4.5	28.3	7.2
16	27.4	38.8	3.2	23.05	22.4	24.6	32.5	M4	4.5	28.3	5.35
18	30.8	38.5	4	23.4	25.6	27	34.9	M4	4.5	31.7	7.25
20	34.2	39.1	4	23.4	28.8	29.4	38.1	M4	4.5	35	7.3
22	37.4	39.3	4	23.4	32.2	31.8	41	M4	4.5	38.3	7.3
24	40.9	38.8	4	23.4	35.3	34.9	44.5	M4	4.5	41.8	6.85
28	**46.7**	**39.1**	**4**	**24.4**	**41.5**	**39.7**	**50.8**	**M5**	**5.5**	**47.6**	**7.8**
32	53.4	38.4	4	24.4	47.8	44.5	57	M5	5.5	54.3	7.5
36	59.6	39.9	4	24.4	52.6	49.2	63.5	M5	5.5	60.5	7.5
40	65.5	38.5	4	24.4	59.2	55.6	69.8	M5	5.5	66.4	7.5

Dimensions in mm

Dimension "L" can be different from the value indicated according to backshells accessories, wires size and some special insert configurations.

This document contains proprietary information and such information shall not be disclosed to any third party for any purpose whatsoever or used for manufacturing purposes without prior written agreement from Radiall VanSystem S.r.l. The data defined in this document are given as an indication, in the effort to improve our products; we reserve the right to make any changes judged necessary.

Inserts

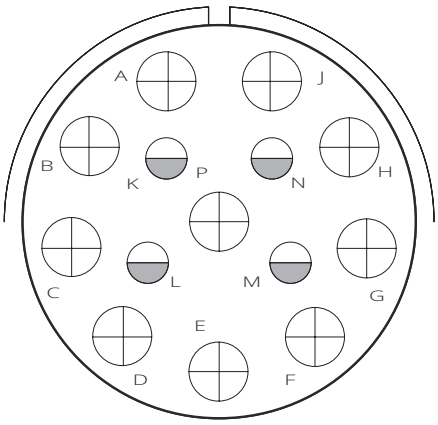

Arrangement	28-20
Gender	Socket
No. of contacts	14
Contacts size	N° 4 x #16 (22A Max)
	N° 10 x #12 (41A Max)
Service Rating	A (700Vdc - 500Vac)
Rotation	N (0°)

Contacts P/N	Qty	Size	Termination	mm² section	AWG section	Stripping length mm	Manual crimp tool	Crimp Die / Locator	Insertion tool	Removal tool	Guide pin
-	-	-	-	-	-	-	-	-	-	-	-

Pinout

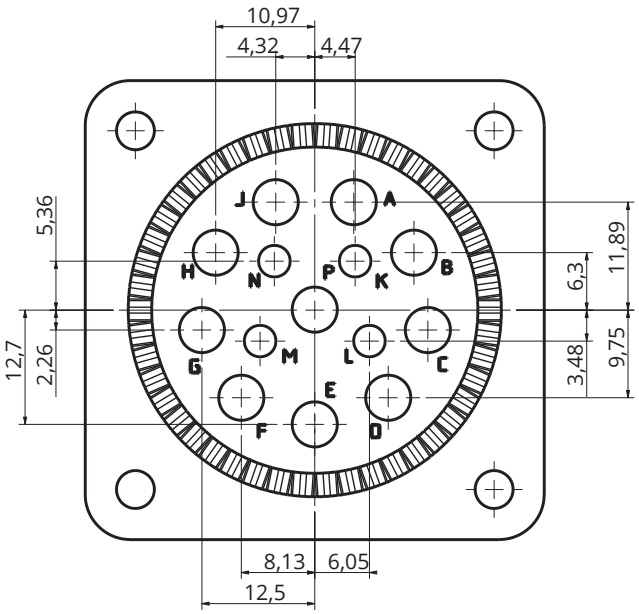

This document contains proprietary information and such information shall not be disclosed to any third party for any purpose whatsoever or used for manufacturing purposes without prior written agreement from Radiall VanSystem S.r.l. The data defined in this document are given as an indication, in the effort to improve our products; we reserve the right to make any changes judged necessary.

Code details

Insert material	RF	Fire behaviour (fire and smoke) complying with EN 45545-2, NFPA130 (ASTME162, ASTME662, BSS7239)
Series	CVBS	Bayonet connector with protected mating ramps
Shell material	_	Aluminum alloy
Shell Type	03	Rear mounting receptacle connector unable to accept rear accessories
Connector Class	_	No rear accessories
Accessories	_	-
Accessories	_	-
Accessories	_	-
Insert	28-20	Arrangement 28-20
Gender Contacts	S	Socket
Polarization	_	N (0°)
Backshell Details	_	-
Contacts Termination	DS	Dip solder for printed circuit board.
Contact Plating	CD5	Nickel + gold 0.4 µ min
Shell Finish	F7	Black epoxy-polyurethane varnish (non conductive), RoHS compliant
Panel Gasket	_	-
Contact modification code	_	-
Customization	_	-

This document contains proprietary information and such information shall not be disclosed to any third party for any purpose whatsoever or used for manufacturing purposes without prior written agreement from Radiall VanSystem S.r.l. The data defined in this document are given as an indication, in the effort to improve our products; we reserve the right to make any changes judged necessary.

Shell type:
Bayonet connector with protected mating ramps
Rear mounting receptacle connector unable to accept rear accessories

Reference Documents:
- Mil-DTL-5015 (where applicable)
- VG 95234 (where applicable)
- EN 60529
- EN45545-2, NFPA130 (ASTME162, ASTME662, BSS7239)
- European Directive 2011/65/UE (RoHS)

General features:
Arrangement: 28-20; Socket; the insert is supplied with rotation: N (0°)
Contact: n.10 size 12; n.4 size 16; Dip solder for printed circuit board.

Operating temperatures: -55°C ÷ +125°C
Protection degree: IP67 (only in the mating area with mated connectors) according to EN 60529
Insulating rubber parts: Fire behaviour (fire and smoke) complying with EN 45545-2, NFPA130 (ASTME162, ASTME662, BSS7239)

Connector supplied with:
- No rear accessories

Electrical specifications:
Nominal Voltage: 700 Vdc / 500 Vac (service A)
Test Voltage: 2000 Vac

Current Rating, single contact:
- maximum current: 41A (#12) 22A (#16) with ambient temperature 20°C
- rated current: 23A (#12) 13A (#16) with ambient temperature 80°C

COMPONENTS	MATERIALS	PLATING / FINISHES
Shells	Aluminum alloy	Black epoxy-polyurethane varnish (non conductive), RoHS compliant
Insulating	Fire behaviour (fire and smoke)	-
Contacts	Copper alloy	Nickel + gold 0.4 µ min
Panel Gasket	-	-
Others part	-	-

ACCESSORIES (included)

P/N	Description	Quantity
-	-	-
-	-	-
-	-	-

PACKAGING

Quantity	Type	Weight
1	Plastic Bags	-
-	Carton Box	-

This document contains proprietary information and such information shall not be disclosed to any third party for any purpose whatsoever or used for manufacturing purposes without prior written agreement from Radiall VanSystem S.r.l. The data defined in this document are given as an indication, in the effort to improve our products; we reserve the right to make any changes judged necessary.