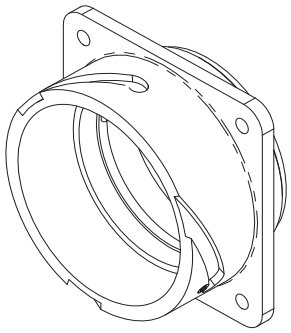

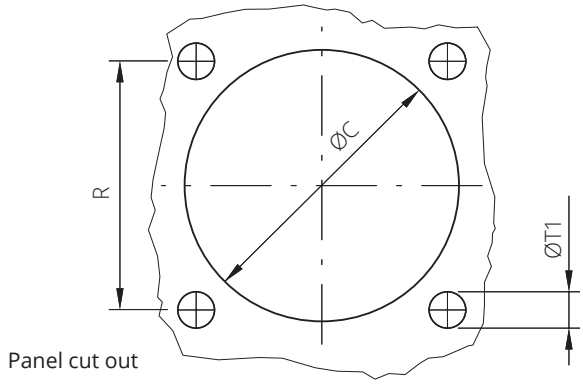


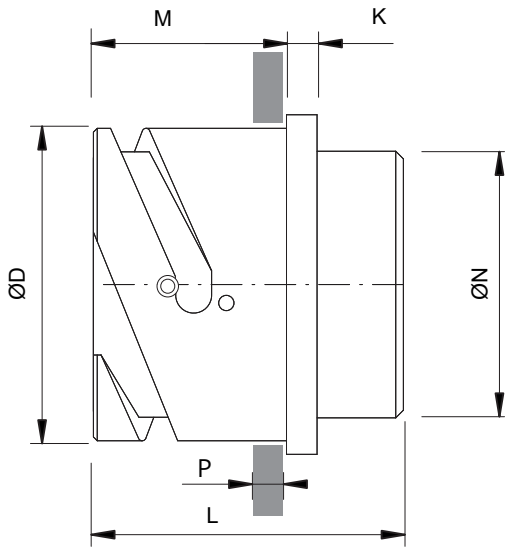


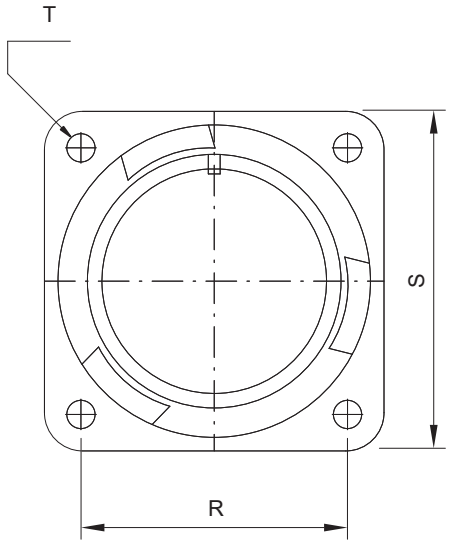


| Shell size | ØD +0 -0.15 | L | K ±0.2 | M ±0.2 | N Thread in inches | R ±0.1 | S ±0.3 | ØT | ØT1 | ØC ±0.2 | P Panel Thickness Max |
|---|---|---|---|---|---|---|---|---|---|---|---|
| 10SL | 18.2 | 30 | 2.8 | 18.2 | 5/8”-24 UNEF | 18.2 | 25.4 | M4 | 4.5 | 19.1 | 6 |
| 14S | 24.6 | 30 | 3.2 | 18.6 | 3/4”-20 UNEF | 23 | 30.2 | M4 | 4.5 | 25.5 | 7.2 |
| 16S | 27.4 | 30 | 3.2 | 18.6 | 7/8”-20 UNEF | 24.6 | 32.5 | M4 | 4.5 | 28.3 | 7.2 |
| 16 | 27.4 | 38.8 | 3.2 | 23.05 | 7/8”-20 UNEF | 24.6 | 32.5 | M4 | 4.5 | 28.3 | 5.35 |
| 18 | 30.8 | 38.5 | 4 | 23.4 | 1”-20 UNEF | 27 | 34.9 | M4 | 4.5 | 31.7 | 7.25 |
| 20 | 34.2 | 39.1 | 4 | 23.4 | 1” 1/8-18 UNEF | 29.4 | 38.1 | M4 | 4.5 | 35 | 7.3 |
| 22 | 37.4 | 39.3 | 4 | 23.4 | 1” 1/4-18 UNEF | 31.8 | 41 | M4 | 4.5 | 38.3 | 7.3 |
| **24** | **40.9** | **38.8** | **4** | **23.4** | **1” 3/8-18 UNEF** | **34.9** | **44.5** | **M4** | **4.5** | **41.8** | **6.85** |
| 28 | 46.7 | 39.1 | 4 | 24.4 | 1” 5/8-18 UNEF | 39.7 | 50.8 | M5 | 5.5 | 47.6 | 7.8 |
| 32 | 53.4 | 38.4 | 4 | 24.4 | 1” 7/8-16 UN | 44.5 | 57 | M5 | 5.5 | 54.3 | 7.5 |
| 36 | 59.6 | 39.9 | 4 | 24.4 | 2” 1/16-16 UNS | 49.2 | 63.5 | M5 | 5.5 | 60.5 | 7.5 |
| 40 | 65.5 | 38.5 | 4 | 24.4 | 2” 5/16-16 UNS | 55.6 | 69.8 | M5 | 5.5 | 66.4 | 7.5 |

*Dimensions in mm*

*Dimension “L” can be different from the value indicated according to backshells accessories, wires size and some special insert configurations.*

This document contains proprietary information and such information shall not be disclosed to any third party for any purpose whatsoever or used for manufacturing purposes without prior written agreement from Radiall VanSystem S.r.l. The data defined in this document are given as an indication, in the effort to improve our products; we reserve the right to make any changes judged necessary.

**Inserts**

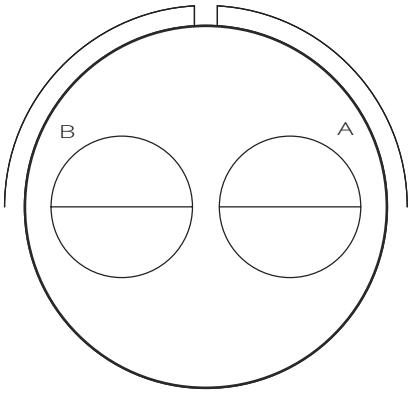


| | |
|---|---|
| **Arrangement** | 24-9 |
| **Gender** | Pin |
| **No. of contacts** | 2 |
| **Contacts size** | N° 2 x #4 (135A Max) |
| | |
| | |
| **Service Rating** | A (700Vdc - 500Vac) |
| | |
| | |
| **Rotation** | N (0°) |

| Contacts P/N | Qty | Size | Termination | mm² section | AWG section | Stripping length mm | Manual crimp tool | Crimp Die / Locator | Insertion tool | Removal tool | Guide pin |
|---|---|---|---|---|---|---|---|---|---|---|---|
| - | - | - | - | - | - | - | - | - | - | - | - |
| | | | | | | | | | | | |

This document contains proprietary information and such information shall not be disclosed to any third party for any purpose whatsoever or used for manufacturing purposes without prior written agreement from Radiall VanSystem S.r.l. The data defined in this document are given as an indication, in the effort to improve our products; we reserve the right to make any changes judged necessary.

## Code details

| | | |
|---|---|---|
| Insert material | RF | Fire behaviour (fire and smoke) complying with EN 45545-2, NFPA130 (ASTME162, ASTME662, BSS7239) |
| Series | CVBS | Bayonet connector with protected mating ramps |
| Shell material | _ | Aluminum alloy |
| Shell Type | 030 | Rear mounting receptacle connector with thread to accept backshells |
| Connector Class | _ | No rear accessories |
| Accessories | _ | - |
| Accessories | _ | - |
| Accessories | _ | - |
| Insert | 24-9 | Arrangement 24-9 |
| Gender Contacts | P | Pin |
| Polarization | _ | N (0°) |
| Backshell Details | _ | - |
| Contacts Termination | LC | Less contacts ( to be purchased separately) |
| Contact Plating | _ | - |
| Shell Finish | F16 | CCF black, conductive - RoHS compliant |
| Panel Gasket | _ | - |
| Contact modification code | _ | - |
| Customization | _ | - |

This document contains proprietary information and such information shall not be disclosed to any third party for any purpose whatsoever or used for manufacturing purposes without prior written agreement from Radiall VanSystem S.r.l. The data defined in this document are given as an indication, in the effort to improve our products; we reserve the right to make any changes judged necessary.

**Shell type:**
Bayonet connector with protected mating ramps
Rear mounting receptacle connector with thread to accept backshells

**Reference Documents:**
- Mil-DTL-5015 (where applicable)
- VG 95234 (where applicable)
- EN 60529
- EN45545-2, NFPA130 (ASTME162, ASTME662, BSS7239)
- European Directive 2011/65/UE (RoHS)

**General features:**
Arrangement: 24-9; Pin; the insert is supplied with rotation: N (0°)
Contact: n.2 size 4; Less contacts ( to be purchased separately)

Operating Temperature: -55 ÷ +150°C
IP Protection degree according EN60529 (mated connectors with adequate accessories): IP67 or IP68 (10meters 12hours, according to the application, connector series and shell type)
Insulating rubber parts: Fire behaviour (fire and smoke) complying with EN 45545-2, NFPA130 (ASTME162, ASTME662, BSS7239)

**Connector supplied with:**
- No rear accessories

**Electrical specifications:**
Nominal Voltage: 700 Vdc / 500 Vac (service A)
Test Voltage: 2000 Vac

Current Rating, single contact:
- maximum current: 135A (#4) with ambient temperature 20°C
- rated current: 80A (#4) with ambient temperature 80°C

| COMPONENTS | MATERIALS | PLATING / FINISHES |
|---|---|---|
| Shells | Aluminum alloy | CCF black, conductive - RoHS compliant |
| Insulating | Fire behaviour (fire and smoke) | - |
| Contacts | - | - |
| Panel Gasket | - | - |
| Others part | - | - |

| ACCESSORIES (included) | | |
|---|---|---|
| **P/N** | **Description** | **Quantity** |
| - | - | - |
| - | - | - |
| - | - | - |

| PACKAGING | | |
|---|---|---|
| **Quantity** | **Type** | **Weight** |
| 1 | Plastic Bags | - |
| - | Carton Box | - |



This document contains proprietary information and such information shall not be disclosed to any third party for any purpose whatsoever or used for manufacturing purposes without prior written agreement from Radiall VanSystem S.r.l. The data defined in this document are given as an indication, in the effort to improve our products; we reserve the right to make any changes judged necessary.