Radiall	TECHNICAL DATA SHEET	C1200-05419 -01
Series CVBS	CVBS 02A 14S-5S CR CD5 F16	**Ref.:** -

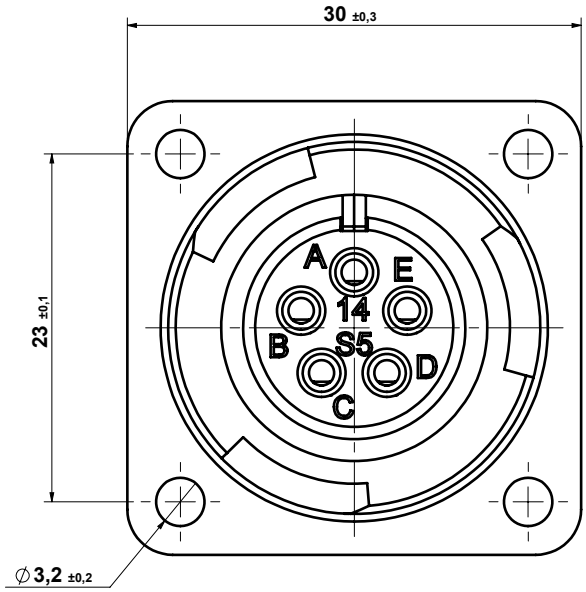

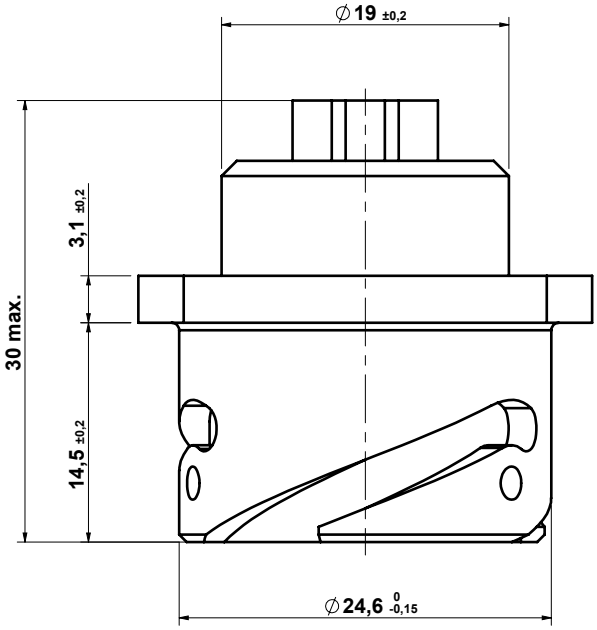

Description:
- Receptacle bayonet connector - front panel mounting unable to accept rear accessories

Reference documents:
- SAE AS 50151 (*where applicable*)
- VG 95234 (*where applicable*)
- EN 60529
- European Directive 2011/65/EU and 2015/863/EU (RoHS 3)

General characteristics:
- Contacts arrangement: 14S-5
- Contacts: n.5 size 16 - crimp-female for cable 1÷1.5mm² (18÷16 AWG)
- Working temperature: -55°C ÷ +125°C
- Protection degree: IP67 (*only in the mating area with mated connectors*) according to EN 60529
- RoHS 3 compliant

Electrical characteristics:
- Nominal voltage: 200Vac/250Vdc (service I)
- Test Voltage: 1.000Vac

Current rating, single contact:
- With ambient temperature 20°C: 22A
- With ambient temperature 80°C: 13A

Materials and finishes:
- Shells: aluminum alloy - Protective finish: CCF black (conductive)
- Insulating rubber parts: chloroprene rubber
- Contacts: copper alloy - Plating: gold 0.4µ min.

DIMENSIONS: mm (inch are given for information only)

Estimated weight: 14.8451g

Release date	**Changes applied to the previous version**			
18/04/2024	**RADIALL PROPRIETARY INFORMATION**	D. De Filippa	D. De Filippa	F. Zimmitti
Issue date		**Drawn by**	**Verified by**	**Approved by**

This document contains proprietary information and such information shall not be disclosed to any third party for any purpose whatsoever or used for manufacturing purposes without prior written agreement from Radiall Italia

This information is given as an indication; in the continual goal to improve our products, we reserve the right to make any modifications judged necessary.