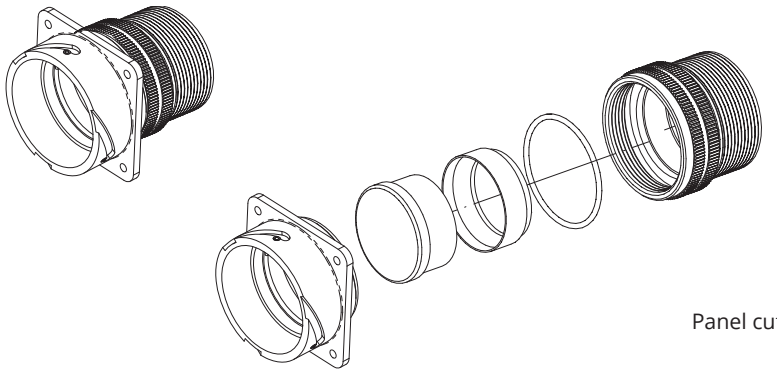

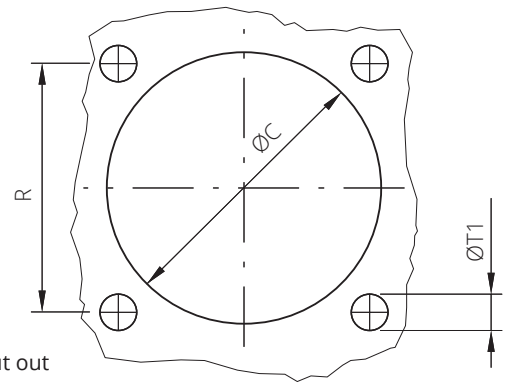


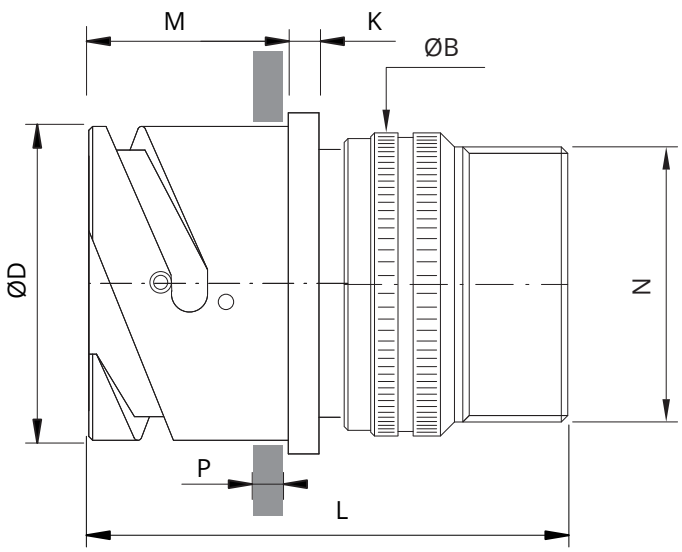


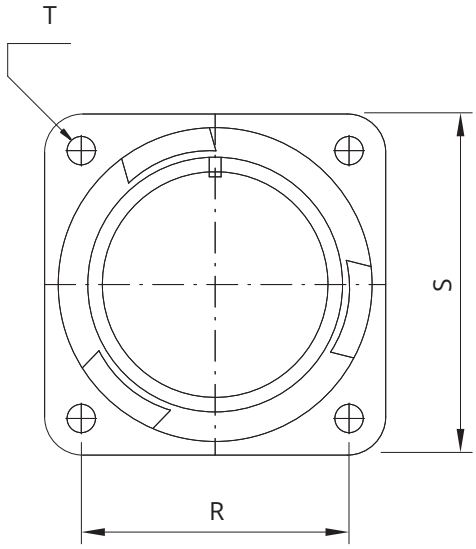


| Shell size | ØD +0 -0.15 | ØB ±0.2 | L | M ±0.2 | K ±0.2 | N Backshell Thread in inches | R ±0.1 | S ±0.3 | ØT | ØT1 | ØC ±0.2 | P Panel Thickness Max |
|---|---|---|---|---|---|---|---|---|---|---|---|---|
| 10SL | 18.2 | 20 | 46 | 18.2 | 2.8 | 5/8”-24 UNEF | 18.2 | 25.4 | M4 | 4.5 | 19.1 | 6 |
| 14S | 24.6 | 24 | 47.5 | 18.6 | 3.2 | 3/4”-20 UNEF | 23 | 30.2 | M4 | 4.5 | 25.5 | 7.2 |
| 16S | 27.4 | 27 | 47.5 | 18.6 | 3.2 | 7/8”-20 UNEF | 24.6 | 32.5 | M4 | 4.5 | 28.3 | 7.2 |
| 16 | 27.4 | 27 | 54.5 | 23.05 | 3.2 | 7/8”-20 UNEF | 24.6 | 32.5 | M4 | 4.5 | 28.3 | 5.35 |
| **18** | **30.8** | **30** | **55.5** | **23.4** | **4** | **1”-20 UNEF** | **27** | **34.9** | **M4** | **4.5** | **31.7** | **7.25** |
| 20 | 34.2 | 32 | 55.5 | 23.4 | 4 | 1” 3/16-18 UNEF | 29.4 | 38.1 | M4 | 4.5 | 35 | 7.3 |
| 22 | 37.4 | 37 | 58 | 23.4 | 4 | 1” 3/16-18 UNEF | 31.8 | 41 | M4 | 4.5 | 38.3 | 7.3 |
| 24 | 40.9 | 40 | 58 | 23.4 | 4 | 1” 7/16-18 UNEF | 34.9 | 44.5 | M4 | 4.5 | 41.8 | 6.85 |
| 28 | 46.7 | 45 | 65 | 24.4 | 4 | 1” 7/16-18 UNEF | 39.7 | 50.8 | M5 | 5.5 | 47.6 | 7.8 |
| 32 | 53.4 | 52 | 65 | 24.4 | 4 | 1” 3/4-18 UNS | 44.5 | 57 | M5 | 5.5 | 54.3 | 7.5 |
| 36 | 59.6 | 58 | 65 | 24.4 | 4 | 2”-18 UNS | 49.2 | 63.5 | M5 | 5.5 | 60.5 | 7.5 |
| 40 | 65.5 | 63.2 | 65 | 24.4 | 4 | 2”1/4-16 UN | 55.6 | 69.8 | M5 | 5.5 | 66.4 | 7.5 |

***Dimensions in mm***

***Dimension “L” can be different from the value indicated according to backshells accessories, wires size and some special insert configurations.***

This document contains proprietary information and such information shall not be disclosed to any third party for any purpose whatsoever or used for manufacturing purposes without prior written agreement from Radiall. The data defined in this document are given as an indication, in the effort to improve our products; we reserve the right to make any changes judged necessary.

## Inserts

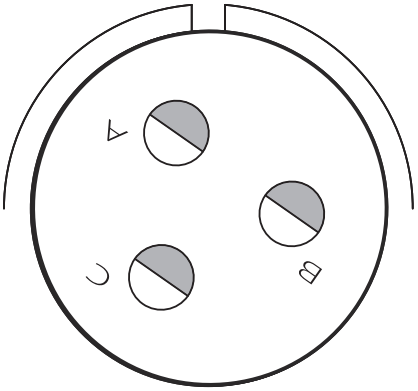


| | |
|---|---|
| **Arrangement** | 18-22 |
| **Gender** | Socket |
| **No. of contacts** | 3 |
| **Contacts size** | N° 3 x #16 (22A Max) |
| | |
| | |
| **Service Rating** | D (1250Vdc - 900Vac) |
| | |
| | |
| **Rotation** | X (145°) |

| Contacts P/N | Qty | Size | Termination | mm² section | AWG section | Stripping length mm | Manual crimp tool | Crimp Die / Locator | Insertion tool | Removal tool | Guide pin |
|---|---|---|---|---|---|---|---|---|---|---|---|
| - | - | - | - | - | - | - | - | - | - | - | - |
| | | | | | | | | | | | |

## Grommet *

### Wire Outside Diameter

| Size | mm |
|---|---|
| 16 | 3.42 |

** Consult our sales office for wire specification*

This document contains proprietary information and such information shall not be disclosed to any third party for any purpose whatsoever or used for manufacturing purposes without prior written agreement from Radiall. The data defined in this document are given as an indication, in the effort to improve our products; we reserve the right to make any changes judged necessary.

## Code details

| | | |
|---|---|---|
| Insert material | _ | Chloroprene rubber |
| Series | CVBS | Bayonet connector with protected mating ramps |
| Shell material | _ | Aluminum alloy |
| Shell Type | 030 | Rear mounting receptacle connector with thread to accept backshells |
| Connector Class | RA | Standard backshell having an external thread suitable for MS3057...A or C type cacle clamps, with waterproof O-ring, grommet and cone |
| Accessories | _ | - |
| Accessories | _ | - |
| Accessories | _ | - |
| Insert | 18-22 | Arrangement 18-22 |
| Gender Contacts | S | Socket |
| Polarization | X | X (145°) |
| Backshell Details | _ | - |
| Contacts Termination | LC | Less contacts ( to be purchased separately) |
| Contact Plating | _ | - |
| Shell Finish | F4 | CCF green (conductive) |
| Panel Gasket | _ | - |
| Contact modification code | _ | - |
| Customization | _ | - |

** The creepage distance is reduced for the insert with contacts for larger wires than the standard ones.*
*The contacts with reduced ØD for smaller wire may be a sealing problem with grommets.*
*The contacts with enlarged ØD for larger wires may be difficulties with grommets.*
*Please contact our sales office.*

This document contains proprietary information and such information shall not be disclosed to any third party for any purpose whatsoever or used for manufacturing purposes without prior written agreement from Radiall. The data defined in this document are given as an indication, in the effort to improve our products; we reserve the right to make any changes judged necessary.

**Shell type:**
Bayonet connector with protected mating ramps
Rear mounting receptacle connector with thread to accept backshells

**Reference Documents:**
- SAE AS 50151 (ex MIL-C-5015 where applicable)
- VG 95234 (where applicable)
- EN 60529

**General features:**
Arrangement: 18-22; Socket; the insert is supplied with rotation: X (145°)
Contact: n.3 size 16; Less contacts ( to be purchased separately)

Operating Temperature: -55 ÷ +125°C
IP Protection degree according EN60529: IP67 or IP68 (10meters 12hours, according to the application, connector series and shell type)
Insulating rubber parts: Chloroprene rubber

**Connector supplied with:**
- Standard backshell having an external thread suitable for MS3057...A or C type cacle clamps, with waterproof O-ring, grommet and cone

**Electrical specifications:**
Nominal Voltage: 1250 Vdc / 900 Vac (service D)
Test Voltage: 2800 Vac

Current Rating, single contact:
- maximum current: 22A (#16) with ambient temperature 20°C
- rated current: 13A (#16) with ambient temperature 80°C

** The creepage distance is reduced for the insert with contacts for larger wires than the standard ones.*
*The contacts with reduced ØD for smaller wire may be a sealing problem with grommets.*
*The contacts with enlarged ØD for larger wires may be difficulties with grommets.*
*Please contact our sales office.*

| COMPONENTS | MATERIALS | PLATING / FINISHES |
|---|---|---|
| Shells | Aluminum alloy | CCF green (conductive) |
| Insulating | Chloroprene rubber | - |
| Contacts | - | - |
| Panel Gasket | - | - |
| Others part | - | - |

| ACCESSORIES (included) | | |
|---|---|---|
| P/N | Description | Quantity |
| - | - | - |
| - | - | - |
| - | - | - |

| PACKAGING | | |
|---|---|---|
| Quantity | Type | Weight |
| 1 | Plastic Bags | - |
| - | Carton Box | - |

This document contains proprietary information and such information shall not be disclosed to any third party for any purpose whatsoever or used for manufacturing purposes without prior written agreement from Radiall. The data defined in this document are given as an indication, in the effort to improve our products; we reserve the right to make any changes judged necessary.