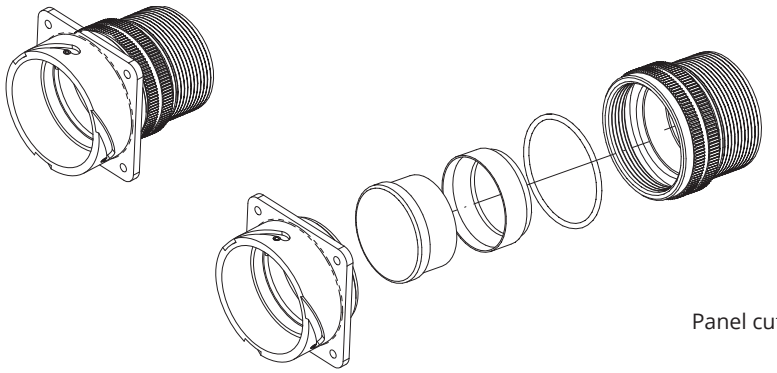

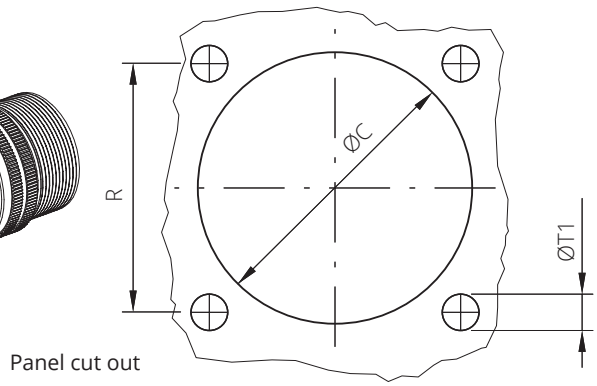

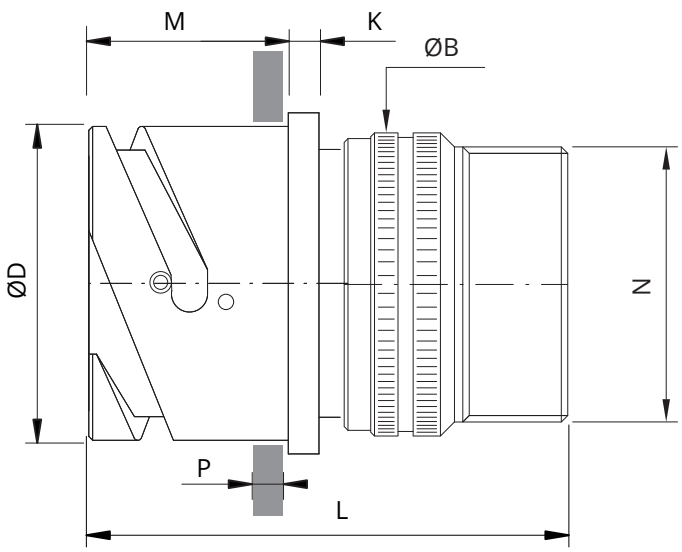

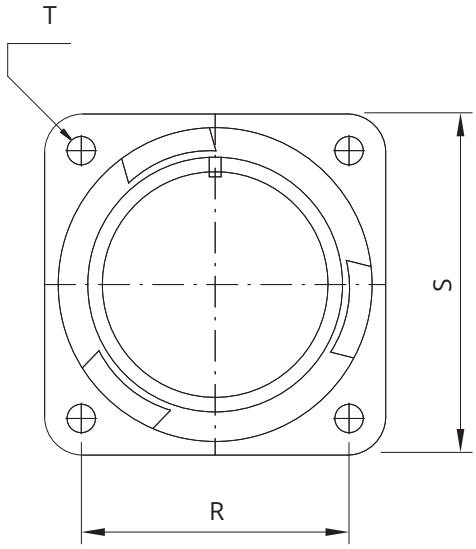

Shell size	ØD +0 -0.15	ØB ±0.2	L	M ±0.2	K ±0.2	N Backshell Thread in inches	R ±0.1	S ±0.3	ØT	ØT1	ØC ±0.2	P Panel Thickness Max
10SL	18.2	20	46	18.2	2.8	5/8”-24 UNEF	18.2	25.4	M4	4.5	19.1	6
14S	24.6	24	47.5	18.6	3.2	3/4”-20 UNEF	23	30.2	M4	4.5	25.5	7.2
16S	27.4	27	47.5	18.6	3.2	7/8”-20 UNEF	24.6	32.5	M4	4.5	28.3	7.2
16	27.4	27	54.5	23.05	3.2	7/8”-20 UNEF	24.6	32.5	M4	4.5	28.3	5.35
18	**30.8**	**30**	**55.5**	**23.4**	**4**	**1”-20 UNEF**	**27**	**34.9**	**M4**	**4.5**	**31.7**	**7.25**
20	34.2	32	55.5	23.4	4	1” 3/16-18 UNEF	29.4	38.1	M4	4.5	35	7.3
22	37.4	37	58	23.4	4	1” 3/16-18 UNEF	31.8	41	M4	4.5	38.3	7.3
24	40.9	40	58	23.4	4	1” 7/16-18 UNEF	34.9	44.5	M4	4.5	41.8	6.85
28	46.7	45	65	24.4	4	1” 7/16-18 UNEF	39.7	50.8	M5	5.5	47.6	7.8
32	53.4	52	65	24.4	4	1” 3/4-18 UNS	44.5	57	M5	5.5	54.3	7.5
36	59.6	58	65	24.4	4	2”-18 UNS	49.2	63.5	M5	5.5	60.5	7.5
40	65.5	63.2	65	24.4	4	2”1/4-16 UN	55.6	69.8	M5	5.5	66.4	7.5

Dimensions in mm

Dimension “L” can be different from the value indicated according to backshells accessories, wires size and some special insert configurations.

This document contains proprietary information and such information shall not be disclosed to any third party for any purpose whatsoever or used for manufacturing purposes without prior written agreement from Radiall. The data defined in this document are given as an indication, in the effort to improve our products; we reserve the right to make any changes judged necessary.

Inserts

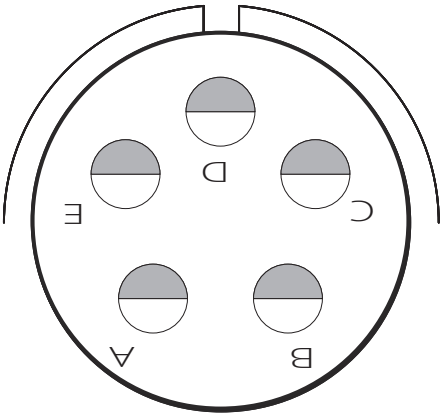

Arrangement	18-20
Gender	Socket
No. of contacts	5
Contacts size	N° 5 x #16 (22A Max)
Service Rating	A (700Vdc - 500Vac)
Rotation	X (180°)

Contacts P/N	Qty	Size	Termination	mm² section	AWG section	Stripping length mm	Manual crimp tool	Crimp Die / Locator	Insertion tool	Removal tool	Guide pin
-	-	-	-	-	-	-	-	-	-	-	-

Grommet *

Wire Outside Diameter

Size	mm
#16	3.5

** Consult our sales office for wire specification*

This document contains proprietary information and such information shall not be disclosed to any third party for any purpose whatsoever or used for manufacturing purposes without prior written agreement from Radiall. The data defined in this document are given as an indication, in the effort to improve our products; we reserve the right to make any changes judged necessary.

Code details

Insert material	_	Chloroprene rubber
Series	CVBS	Bayonet connector with protected mating ramps
Shell material	_	Aluminum alloy
Shell Type	030	Rear mounting receptacle connector with thread to accept backshells
Connector Class	RA	Standard backshell having an external thread suitable for MS3057...A or C type cacle clamps, with waterproof O-ring, grommet and cone
Accessories	_	-
Accessories	_	-
Accessories	_	-
Insert	18-20	Arrangement 18-20
Gender Contacts	S	Socket
Polarization	X	X (180°)
Backshell Details	_	-
Contacts Termination	LC	Less contacts (to be purchased separately)
Contact Plating	_	-
Shell Finish	F16	CCF black, conductive - RoHS compliant
Panel Gasket	_	-
Contact modification code	_	-
Customization	_	-

** The creepage distance is reduced for the insert with contacts for larger wires than the standard ones.*
The contacts with reduced ØD for smaller wire may be a sealing problem with grommets.
The contacts with enlarged ØD for larger wires may be difficulties with grommets.
Please contact our sales office.

This document contains proprietary information and such information shall not be disclosed to any third party for any purpose whatsoever or used for manufacturing purposes without prior written agreement from Radiall. The data defined in this document are given as an indication, in the effort to improve our products; we reserve the right to make any changes judged necessary.

Shell type:
Bayonet connector with protected mating ramps
Rear mounting receptacle connector with thread to accept backshells

Reference Documents:
- SAE AS 50151 (ex MIL-C-5015 where applicable)
- VG 95234 (where applicable)
- EN 60529
- European Directive 2011/65/UE (RoHS)

General features:
Arrangement: 18-20; Socket; the insert is supplied with rotation: X (180°)
Contact: n.5 size 16; Less contacts (to be purchased separately)

Operating Temperature: -55 ÷ +125°C
IP Protection degree according EN60529: IP67 or IP68 (10meters 12hours, according to the application, connector series and shell type)
Insulating rubber parts: Chloroprene rubber

Connector supplied with:
- Standard backshell having an external thread suitable for MS3057...A or C type cacle clamps, with waterproof O-ring, grommet and cone

Electrical specifications:
Nominal Voltage: 700 Vdc / 500 Vac (service A)
Test Voltage: 2000 Vac

Current Rating, single contact:
- maximum current: 22A (#16) with ambient temperature 20°C
- rated current: 13A (#16) with ambient temperature 80°C

** The creepage distance is reduced for the insert with contacts for larger wires than the standard ones.*
The contacts with reduced ØD for smaller wire may be a sealing problem with grommets.
The contacts with enlarged ØD for larger wires may be difficulties with grommets.
Please contact our sales office.

COMPONENTS	MATERIALS	PLATING / FINISHES
Shells	Aluminum alloy	CCF black, conductive - RoHS compliant
Insulating	Chloroprene rubber	-
Contacts	-	-
Panel Gasket	-	-
Others part	-	-

ACCESSORIES (included)		
P/N	Description	Quantity
-	-	-
-	-	-
-	-	-

PACKAGING		
Quantity	Type	Weight
1	Plastic Bags	-
-	Carton Box	-

This document contains proprietary information and such information shall not be disclosed to any third party for any purpose whatsoever or used for manufacturing purposes without prior written agreement from Radiall. The data defined in this document are given as an indication, in the effort to improve our products; we reserve the right to make any changes judged necessary.