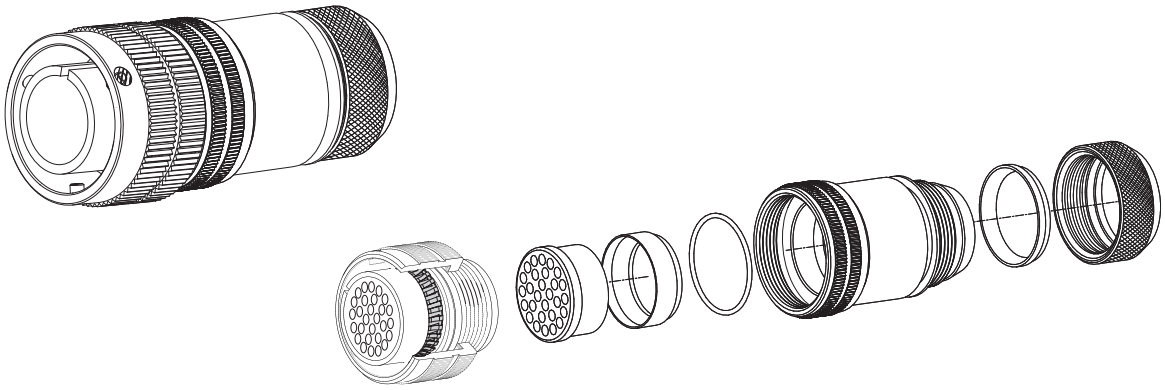

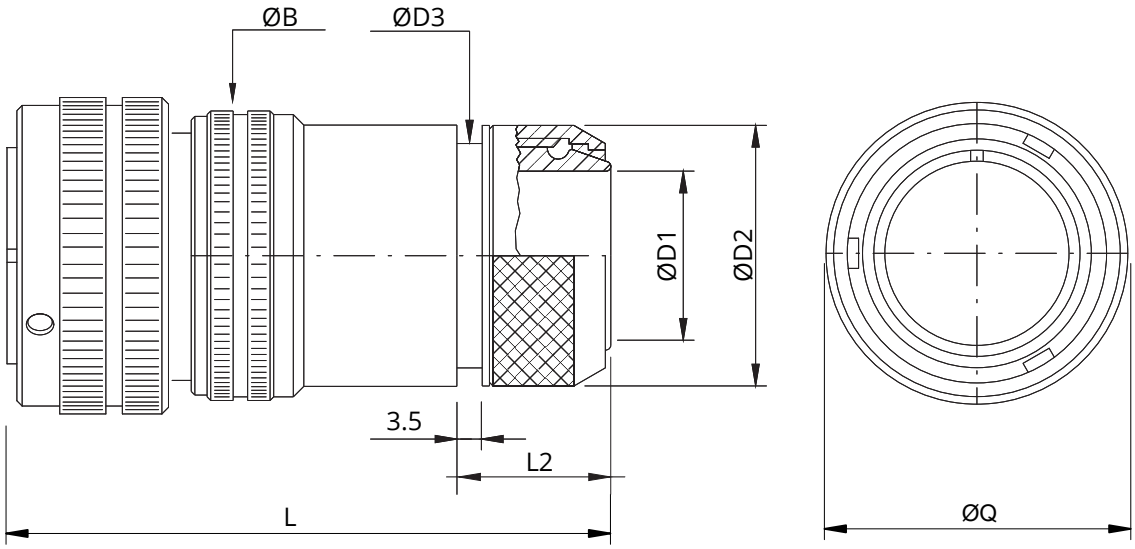

Shell size	ØQ Max	ØB ±0.2	ØD1 ±0.2	ØD2 ±0.2	ØD3 ±0.2	L	L2 ±0.2
10SL	23.3	20	8.6	18.5	16.3	66	18
14S	29.5	24	10.6	22	20	66	17.6
16S	33	27	10.4	25	23	66	20.7
16	33	27	13.5	25	23	75.5	20.8
18	**37**	**30**	**14.5**	**28**	**24.5**	**75.5**	**20.8**
20	41	32	18.4	32	28.5	75.5	20.8
22	43	37	20.7	34	30.5	75.5	20.8
24	48	40	24.6	38.5	34.5	81	20.7
28	53	46	25	40	36	81	21.8
32	60	52	33.3	48	44	82	20.7
36	66.2	58	38.5	55	51	82	20.7
40	72.4	63.8	46	62	58	83	21.8

Dimensions in mm

Dimension "L" can be different from the value indicated according to backshells accessories, wires size and some special insert configurations.

This document contains proprietary information and such information shall not be disclosed to any third party for any purpose whatsoever or used for manufacturing purposes without prior written agreement from Radiall. The data defined in this document are given as an indication, in the effort to improve our products; we reserve the right to make any changes judged necessary.

Inserts

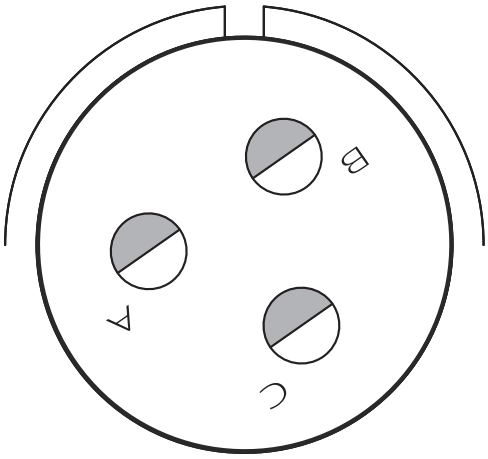

Arrangement	18-22
Gender	Socket
No. of contacts	3
Contacts size	N° 3 x #16 (22A Max)
Service Rating	D (1250Vdc - 900Vac)
Rotation	Y (215°)

Contacts P/N	Qty	Size	Termination	mm² section	AWG section	Stripping length mm	Manual crimp tool	Crimp Die / Locator	Insertion tool	Removal tool	Guide pin
-	-	-	-	-	-	-	-	-	-	-	-

Grommet *

Wire Outside Diameter

Size	mm
16	3.42

** Consult our sales office for wire specification*

This document contains proprietary information and such information shall not be disclosed to any third party for any purpose whatsoever or used for manufacturing purposes without prior written agreement from Radiall. The data defined in this document are given as an indication, in the effort to improve our products; we reserve the right to make any changes judged necessary.

Code details

Insert material	_	Chloroprene rubber
Series	CVBS	Bayonet connector with protected mating ramps
Shell material	_	Aluminum alloy
Shell Type	96	Plug connector, provided with grounding finger to guarantee shielding - with straight backshell and coupling nut
Connector Class	GV	Backshell for shield hose and heat shrink tubing termination, with waterproof o-ring
Accessories	_	-
Accessories	_	-
Accessories	_	-
Insert	18-22	Arrangement 18-22
Gender Contacts	S	Socket
Polarization	Y	Y (215°)
Backshell Details:	_	-
Contacts Termination	LC	Less contacts (to be purchased separately)
Contact Plating	_	-
Shell Finish	F4	CCF green (conductive)
Panel Gasket	_	-
Contact modification code	_	-
Customization	_	-

** The creepage distance is reduced for the insert with contacts for larger wires than the standard ones.*
The contacts with reduced ØD for smaller wire may be a sealing problem with grommets.
The contacts with enlarged ØD for larger wires may be difficulties with grommets.
Please contact our sales office.

This document contains proprietary information and such information shall not be disclosed to any third party for any purpose whatsoever or used for manufacturing purposes without prior written agreement from Radiall. The data defined in this document are given as an indication, in the effort to improve our products; we reserve the right to make any changes judged necessary.

Shell type:
Bayonet connector with protected mating ramps
Plug connector, provided with grounding finger to guarantee shielding - with straight backshell and coupling nut

Reference Documents:
- SAE AS 50151 (ex MIL-C-5015 where applicable)
- VG 95234 (where applicable)
- EN 60529

General features:
Arrangement: 18-22; Socket; the insert is supplied with rotation: Y (215°)
Contact: n.3 size 16; Less contacts (to be purchased separately)

Operating Temperature: -55 ÷ +125°C
IP Protection degree according EN60529: IP67 or IP68 (10meters 12hours, according to the application, connector series and shell type)
Insulating rubber parts: Chloroprene rubber

Connector supplied with:
- Backshell for shield hose and heat shrink tubing termination, with waterproof o-ring

Electrical specifications:
Nominal Voltage: 1250 Vdc / 900 Vac (service D)
Test Voltage: 2800 Vac

Current Rating, single contact:
- maximum current: 22A (#16) with ambient temperature 20°C
- rated current: 13A (#16) with ambient temperature 80°C

** The creepage distance is reduced for the insert with contacts for larger wires than the standard ones.*
The contacts with reduced ØD for smaller wire may be a sealing problem with grommets.
The contacts with enlarged ØD for larger wires may be difficulties with grommets.
Please contact our sales office.

COMPONENTS	MATERIALS	PLATING / FINISHES	ACCESSORIES (included)		
Shells	Aluminum alloy	CCF green (conductive)	-	-	-
Insulating	Chloroprene rubber	-	-	-	-
Contacts	-	-	-	-	-
Panel Gasket	-	-			
Others part	-	-			

PACKAGING		
Quantity	**Type**	**Weight**
1	Plastic Bags	-
-	Carton Box	-

This document contains proprietary information and such information shall not be disclosed to any third party for any purpose whatsoever or used for manufacturing purposes without prior written agreement from Radiall. The data defined in this document are given as an indication, in the effort to improve our products; we reserve the right to make any changes judged necessary.