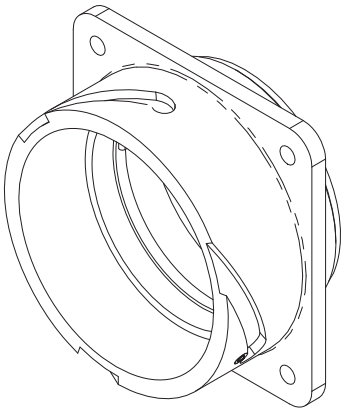

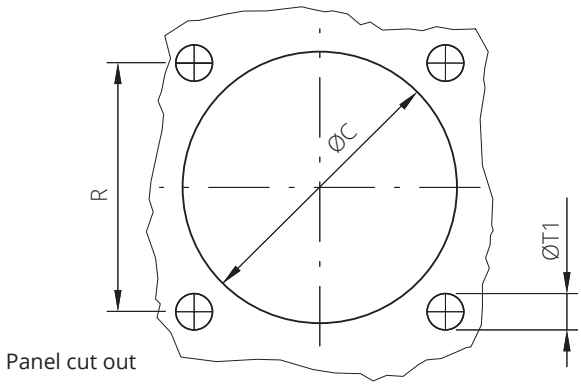

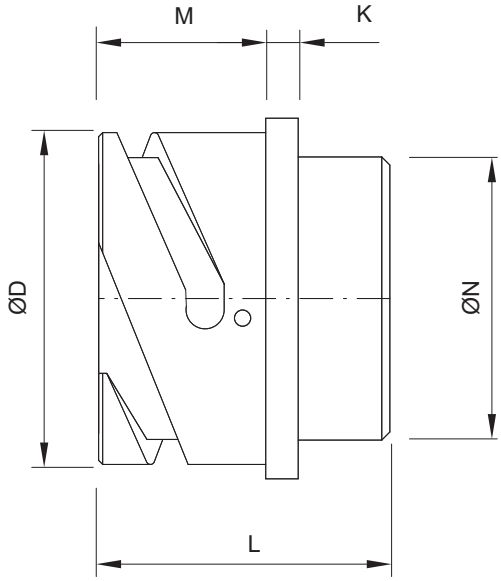

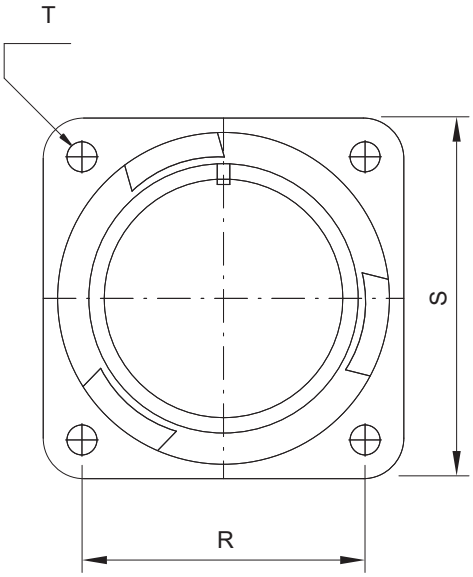

Shell size	ØD +0 -0.15	L	K ±0.2	M ±0.2	ØN Max	R ±0.1	S ±0.3	ØT ±0.2	ØT1 Through holes	ØC ±0.2
10SL	18.2	24.6	2.8	14.2	16.1	18.2	25.4	3.1	3.4	17
14S	24.6	24.6	3.2	14.5	19.2	23	30.2	3.1	3.4	20
16S	27.4	24.6	3.2	14.2	22.5	24.6	32.5	3.1	3.4	23
16	27.4	34.1	3.2	19	22.4	24.6	32.5	3.1	3.4	23
18	30.8	34.1	4	19	25.6	27	34.9	3.1	3.4	26.5
20	34.2	34.3	4	19	28.8	29.4	38.1	3.1	3.4	30
22	37.4	34.3	4	19.7	32.2	31.8	41	3.1	3.4	33
24	40.9	35.8	4	20.6	35.3	34.9	44.5	3.7	3.9	36
28	46.7	35.8	4	20.6	41.5	39.7	50.8	3.7	3.9	42
32	53.4	37.6	4	22.2	47.8	44.5	57	4.4	4.5	48.5
36	**59.6**	**37.6**	**4**	**22.2**	**52.6**	**49.2**	**63.5**	**4.4**	**4.5**	**55**
40	65.5	37.6	4	22.2	59.2	55.6	69.8	4.4	4.5	61

Dimensions in mm

Dimension "L" can be different from the value indicated according to backshells accessories, wires size and some special insert configurations.

This document contains proprietary information and such information shall not be disclosed to any third party for any purpose whatsoever or used for manufacturing purposes without prior written agreement from Radiall. The data defined in this document are given as an indication, in the effort to improve our products; we reserve the right to make any changes judged necessary.

Inserts

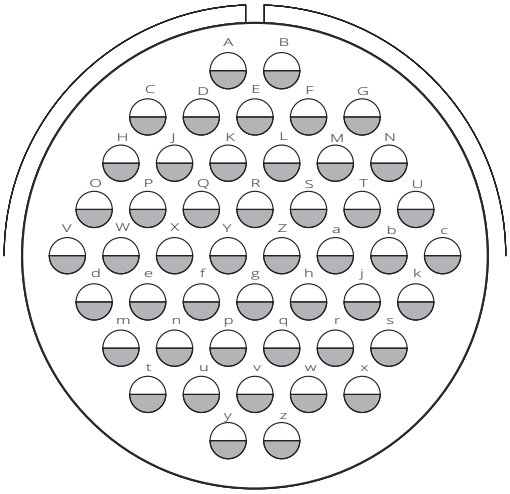

Arrangement	36-10
Gender	Pin
No. of contacts	48
Contacts size	N° 48 x #16 (22A Max)
Service Rating	A (700Vdc - 500Vac)
Rotation	N (0°)

Contacts P/N	Qty	Size	Termination	mm² section	AWG section	Stripping length mm	Manual crimp tool	Crimp Die / Locator	Insertion tool	Removal tool	Guide pin
ST485 16P CD5	48	16	crimp	1÷1.5	18÷16	6.3	CRT-784/1	LOC-784	CTIN-784-16	CTES-784-16	GP-784-16

This document contains proprietary information and such information shall not be disclosed to any third party for any purpose whatsoever or used for manufacturing purposes without prior written agreement from Radiall. The data defined in this document are given as an indication, in the effort to improve our products; we reserve the right to make any changes judged necessary.

Code details

Insert material	_	Chloroprene rubber
Series	CVB	Bayonet connector
Shell material	_	Aluminum alloy
Shell Type	02A	Front mounting receptacle connector non enviromental (equivalent MS3102A threaded version or MS3102A..B bayonet version)
Connector Class	_	No rear accessories
Accessories	_	-
Accessories	_	-
Accessories	_	-
Insert	36-10	Arrangement 36-10
Gender Contacts	P	Pin
Polarization	_	N (0°)
Backshell Details	_	-
Contacts Termination	CR	Crimp
Contact Plating	CD5	Nickel + gold 0.4 µ min
Shell Finish	F4	CCF green (conductive)
Panel Gasket	_	-
Contact modification code	_	-
Customization	_	-

This document contains proprietary information and such information shall not be disclosed to any third party for any purpose whatsoever or used for manufacturing purposes without prior written agreement from Radiall. The data defined in this document are given as an indication, in the effort to improve our products; we reserve the right to make any changes judged necessary.

Shell type:
Bayonet connector
Front mounting receptacle connector non enviromental (equivalent MS3102A threaded version or MS3102A..B bayonet version)

Reference Documents:
- SAE AS 50151 (ex MIL-C-5015 where applicable)
- VG 95234 (where applicable)
- EN 60529

General features:
Arrangement: 36-10; Pin; the insert is supplied with rotation: N (0°)
Contact: n.48 size 16; Crimp

Operating Temperature: -55 ÷ +125°C
IP Protection degree according EN60529: IP67 (in the mating area only)
Insulating rubber parts: Chloroprene rubber

Connector supplied with:
- No rear accessories

Electrical specifications:
Nominal Voltage: 700 Vdc / 500 Vac (service A)
Test Voltage: 2000 Vac

Current Rating, single contact:
- maximum current: 22A (#16) with ambient temperature 20°C
- rated current: 13A (#16) with ambient temperature 80°C

COMPONENTS	MATERIALS	PLATING / FINISHES
Shells	Aluminum alloy	CCF green (conductive)
Insulating	Chloroprene rubber	-
Contacts	Copper alloy	Nickel + gold 0.4 µ min
Panel Gasket	-	-
Others part	-	-

ACCESSORIES (included)		
P/N	Description	Quantity
-	-	-
-	-	-
-	-	-

PACKAGING		
Quantity	Type	Weight
1	Plastic Bags	-
-	Carton Box	-

This document contains proprietary information and such information shall not be disclosed to any third party for any purpose whatsoever or used for manufacturing purposes without prior written agreement from Radiall. The data defined in this document are given as an indication, in the effort to improve our products; we reserve the right to make any changes judged necessary.