Radiall	TECHNICAL DATA SHEET	C1200-05354 -01
Series CVB	CVB 02A 16S-1S CR F7	**Ref.:** -

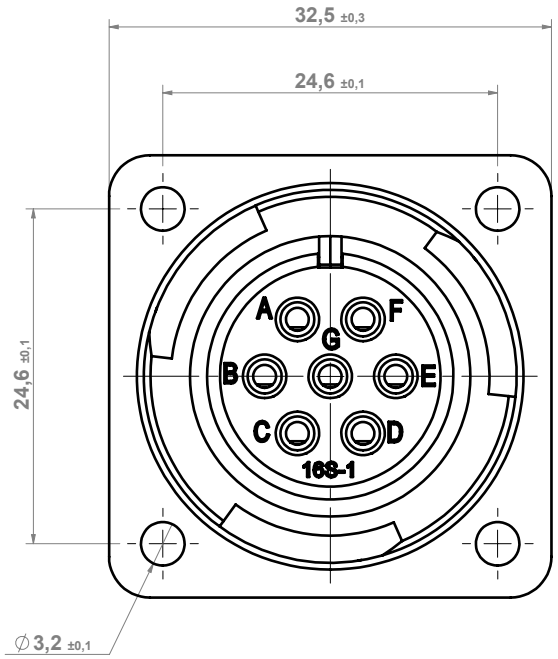

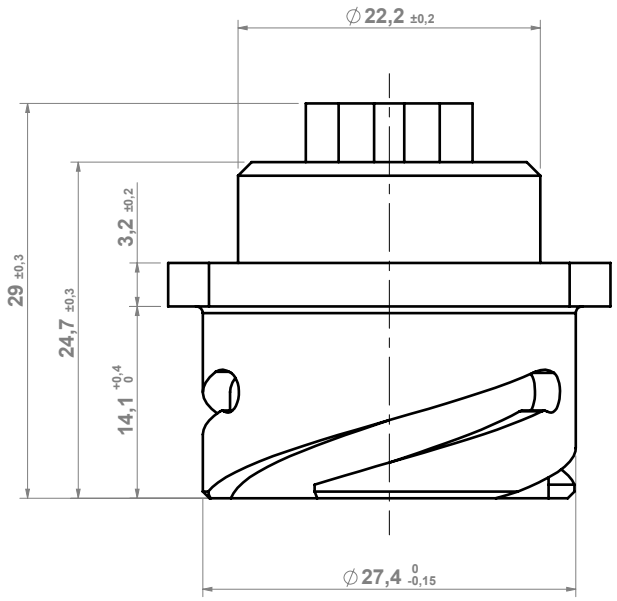

Description:
Receptacle bayonet connector - front panel mounting
unable to accept rear accessories

Reference documents:
- SAE AS 50151 (where applicable)
- VG 95234 (where applicable)
- EN 60529
- European Directive 2011/65/EU and 2015/863/EU (RoHS 3)

General characteristics:
- Contacts arrangement: 16S-1
- Contacts: n.7 size 16S - Crimp-socket for cable 1÷1.5mm² (18÷16 AWG)
- Working temperature: -55°C ÷ +125°C
- Protection degree: IP67 (Only in the mating area with *mated connectors*) according to EN 60529
- RoHS 3 compliant

Electrical characteristics:
- Nominal voltage: 500Vac/700Vdc (service A)
- Test Voltage: 2.000Vac

Current rating, single contact:
- With ambient temperature 20°C: 22A
- With ambient temperature 80°C: 13A

Materials and finishes:
- Shells: aluminum alloy - Protective finish: black epoxy varnish applied by cataphoresys (non conductive)
- Insulating rubber parts: chloroprene rubber
- Contacts: copper alloy - Plating: silver 3.5µ min.

DIMENSIONS: mm (inch are given for information only)

Estimated weight: 17.3095g

Release date	Changes applied to the previous version			
18/03/2024	**RADIALL PROPRIETARY INFORMATION**	D. De Filippa	D. De Filippa	F. Zimmitti
Issue date		Drawn by	Verified by	Approved by

This document contains proprietary information and such information shall not be disclosed to any third party for any purpose whatsoever or used for manufacturing purposes without prior written agreement from Radiall Italia

This information is given as an indication; in the continual goal to improve our products, we reserve the right to make any modifications judged necessary.