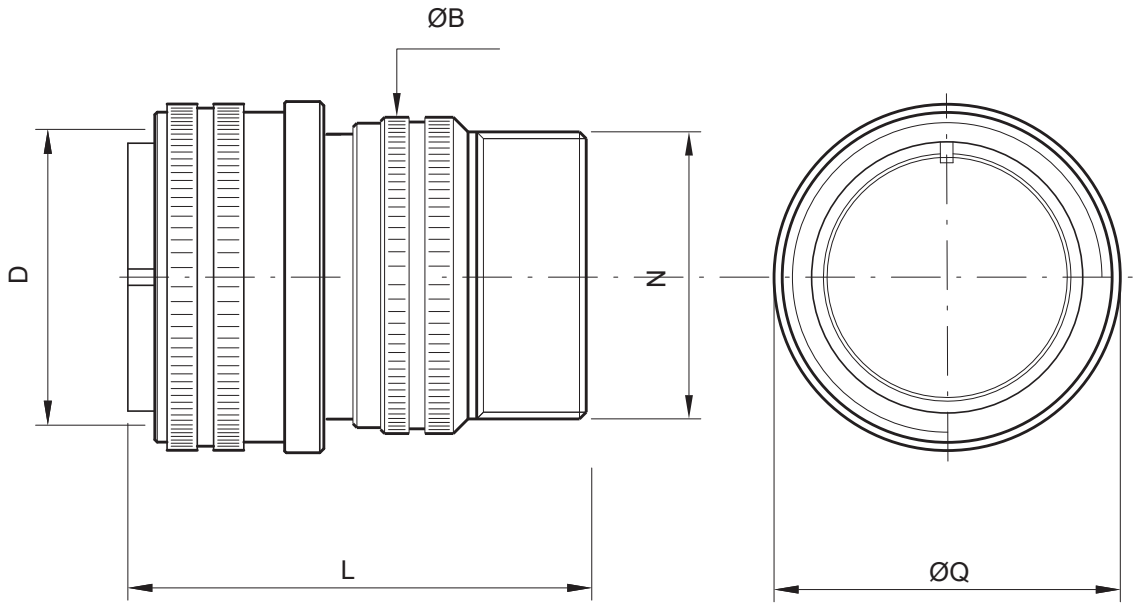

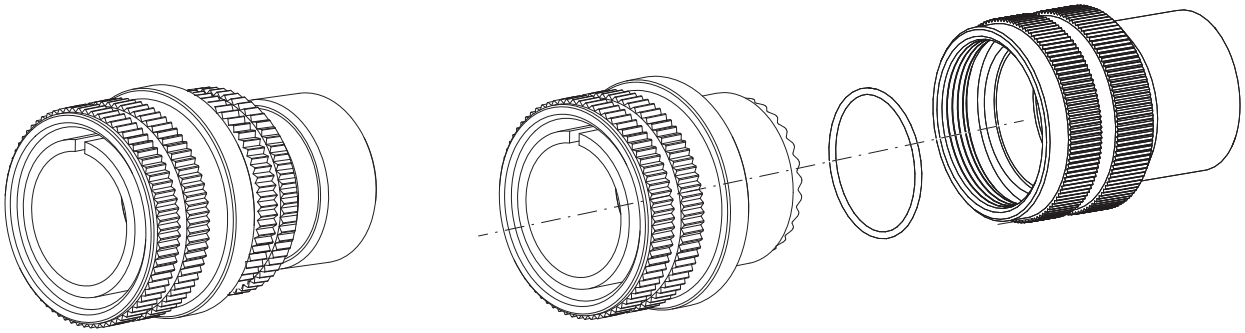

Shell size	D Connectors Thread in inches	ØQ ±0.2	ØB ±0.2	L max	N Backshell Thread in inches
10SL	5/8”-24 UNEF	22.8	20	36	5/8”-24 UNEF
14S	7/8”-20 UNEF	28.5	24	43	3/4”-20 UNEF
16S	1”-20 UNEF	31.8	27	43	7/8”-20 UNEF
16	1”-20 UNEF	31.8	27	49	7/8”-20 UNEF
18	1”1/8-18 UNEF	34	30	52	1”-20 UNEF
20	1”1/4-18 UNEF	37.3	32	52.5	1” 3/16-18 UNEF
22	1”3/8-18 UNEF	40.5	37	55	1” 3/16-18 UNEF
24	1”1/2-18 UNEF	43.5	40	55	1” 7/16-18 UNEF
28	**1”3/4-18 UNS**	**50**	**45**	**62**	**1” 7/16-18 UNEF**
32	2”-18 UNS	56.1	52	62	1” 3/4-18 UNS
36	2”1/4-16 UN	62.5	58	62	2”-18 UNS
40	2”1/2-16 UN	69.1	63.8	64	2”1/4-16 UN

Dimensions in mm

Dimension “L” can be different from the value indicated according to backshells accessories, wires size and some special insert configurations.

This document contains proprietary information and such information shall not be disclosed to any third party for any purpose whatsoever or used for manufacturing purposes without prior written agreement from Radiall VanSystem S.r.l. The data defined in this document are given as an indication, in the effort to improve our products; we reserve the right to make any changes judged necessary.

Inserts

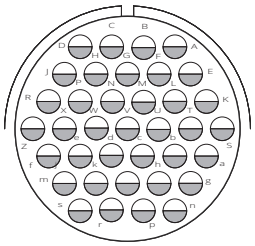

Arrangement	28-21
Gender	Socket
No. of contacts	37
Contacts size	N° 37 x #16 (22A Max)
Service Rating	A (700Vdc - 500Vac)
Rotation	N (0°)

Contacts P/N	Qty	Size	Termination	mm² section	AWG section	Stripping length mm	Manual crimp tool	Crimp Die / Locator	Insertion tool	Removal tool	Guide pin
ST385 16S	37	16	solder	-	18÷16	7	-	-	-	-	-

This document contains proprietary information and such information shall not be disclosed to any third party for any purpose whatsoever or used for manufacturing purposes without prior written agreement from Radiall VanSystem S.r.l. The data defined in this document are given as an indication, in the effort to improve our products; we reserve the right to make any changes judged necessary.

Code details

Insert material	_	Chloroprene rubber
Series	CVS	Thread connectors
Shell material	_	Aluminum alloy
Shell Type	06	Plug connector for straight backshell, with coupling nut
Connector Class	A	Backshell having an external thread suitable for MS3057...A or C type cable-clamps
Accessories	_	-
Accessories	_	-
Accessories	_	-
Insert	28-21	Arrangement 28-21
Gender Contacts	S	Socket
Polarization	_	N (0°)
Backshell Details	_	-
Contacts Termination	_	Solder
Contact Plating	_	Silver 3.5µ min
Shell Finish	F4	CCF green (conductive)
Panel Gasket	_	-
Contact modification code	_	-
Customization	_	-

This document contains proprietary information and such information shall not be disclosed to any third party for any purpose whatsoever or used for manufacturing purposes without prior written agreement from Radiall VanSystem S.r.l. The data defined in this document are given as an indication, in the effort to improve our products; we reserve the right to make any changes judged necessary.

Shell type:
Thread connectors
Plug connector for straight backshell, with coupling nut

Reference Documents:
- Mil-DTL-5015 (where applicable)
- VG 95234 (where applicable)
- EN 60529

General features:
Arrangement: 28-21; Socket; the insert is supplied with rotation: N (0°)
Contact: n.37 size 16; Solder

Operating temperatures: -55°C ÷ +125°C
Protection degree (mated connectors; according to EN 60529): IP54
Insulating rubber parts: Chloroprene rubber

Connector supplied with:
- Backshell having an external thread suitable for MS3057...A or C type cable-clamps

Electrical specifications:
Nominal Voltage: 700 Vdc / 500 Vac (service A)
Test Voltage: 2000 Vac

Current Rating, single contact:
- maximum current: 22A (#16) with ambient temperature 20°C
- rated current: 13A (#16) with ambient temperature 80°C

COMPONENTS	MATERIALS	PLATING / FINISHES	ACCESSORIES (included)		
Shells	Aluminum alloy	CCF green (conductive)	-	-	-
Insulating	Chloroprene rubber	-	-	-	-
Contacts	Copper alloy	Silver 3.5µ min	-	-	-
Panel Gasket	-	-	-	-	-
Others part	-	-			

PACKAGING		
Quantity	**Type**	**Weight**
1	Plastic Bags	-
-	Carton Box	-

This document contains proprietary information and such information shall not be disclosed to any third party for any purpose whatsoever or used for manufacturing purposes without prior written agreement from Radiall VanSystem S.r.l. The data defined in this document are given as an indication, in the effort to improve our products; we reserve the right to make any changes judged necessary.