RADIALL® MULTICONTACT CONNECTORS	TECHNICAL DATA SHEET	618 303 005

Series		Issue:	Page
MPX	SIZE 22 REAR RELEASE. REAR REMOVABLE PC POST SOCKET CONTACT	22/04/99	1 / 1

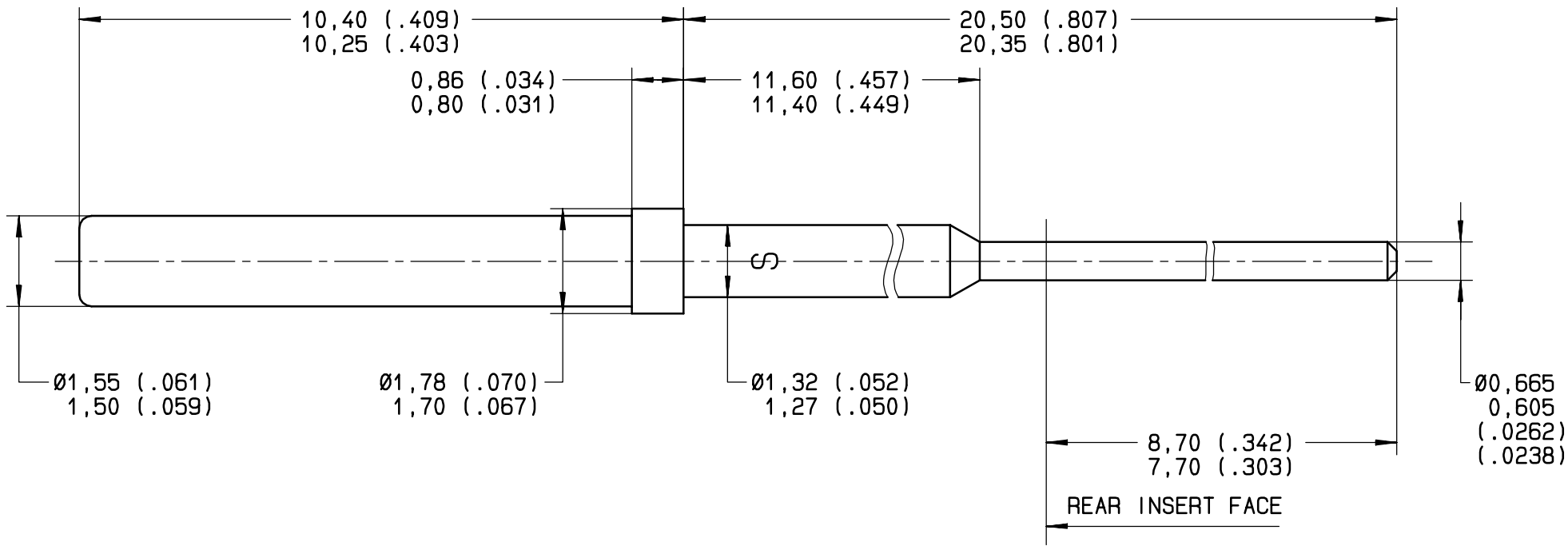

MATERIAL:
BODY: BERYLLIUM COPPER PER ASTM-B-196
PROTECTIVE SLEEVE: STAINLESS STEEL PER AISI 305

FINISH:
BODY: .00005 INCH OF GOLD PER MIL-G-45204 TYPE I OR II, GRADE C OR D, CLASS 1 OVER NICKEL PER QQ-N-290
PROTECTIVE SLEEVE: PASSIVATED PER QQ-P-35

INSERTION/EXTRACTION TOOL: M81969/1-01 (RADIALL 282885)

This information is given as an indication. In the continual goal to improve our products, we reserve the right to make any modifications judged necessary.

CREATION	Issue	Revisions	Name	Approved
PEN: M940104008B				
NOM: MOKHTARI				
DATE: 13/03/95	22/04/99	REDRAWN	MACARI	
APPR.: BALDYROU				

RADIALL®
101, rue Philibert Hoffmann Z.I. Ouest
93116 ROSNY/BOIS Cedex (France)
Tl.:01 49 35 35 35
Fax.:01 48 54 63 63
Tlex:RADIA 235220