RADIALL® MULTICONTACT CONNECTORS	TECHNICAL DATA SHEET	617 251

Series		Issue:	Page
EPX	SIZE 12 CRIMP PIN CONTACT WITH SIZE 16 REDUCED BARREL	Jan 25 , 2008	1/1

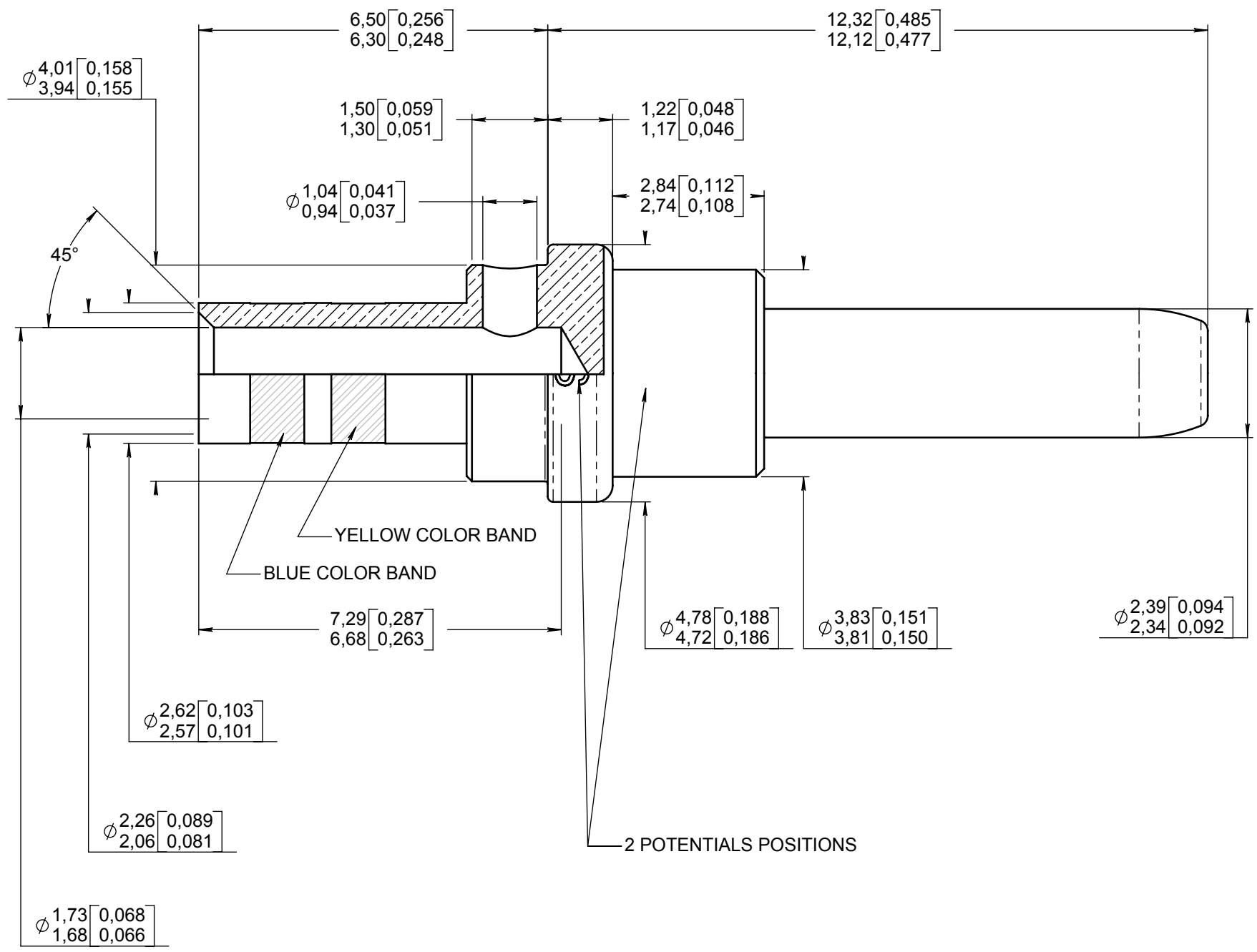

MATERIAL : COPPER ALLOY HARDNESS IN KNOOP 120 MAX (107 HV) FOR CRIMP BARREL

FINISH : GOLD PER MIL-G-45204 TYPE I OR II GRADE C OR D CLASS 1 50 MICROINCHES OVER NICKEL PLATE PER QQ-N-290

WIRES ACCOMODATED : AWG 16-18-20
INSULATOR DIAMETER : .133 MAX (3,40)
STRIP LENGHT : .236 (6)

CRIMP CONTACT TENSILE REQUIREMENTS USING MIL SPEC TOOLING AND WIRE SPEC
MIL-W-81381/12 16 GA. 37 LBS (16,5 daN)
MIL-W-22759/41 16 GA. 50 LBS (22,5 daN)
M22520/1-01 16 GA. 49 LBS (22 daN)

CRIMPED CONTACTS WILL SHOW NO CRACK WHEN INSPECTED PER MIL-C-22520 AT 10X

RADIALL TOOLING RECOMMENDATION
CRIMPING TOOL : M22520/1-01 (RADIALL 282 291)
SELECTOR POSITION : 6 FOR AWG 16
5 FOR AWG 18
4 FOR AWG 20

POSITIONER : M22520/1-02 (RADIALL 282 972)

INSERTION/EXTRACTION TOOL : M81969/14-04 (RADIALL P/N : 282 549 004)

DIMENSIONS : mm (inch) -

	Issue	Revisions	Name	Approved
CREATION	Jan 25, 08	Redrawn and dimensions modified and ins/ext tool updated	Pailot N	Pessard M.
PEN: M980400006A	Jan 12 99	2 "S" potential locations added. Syntax error : crack was creak. Updated from the detail drawing	Garcia L	Giet L
NOM: ARNAULT F. DATE: Feb 23, 98	Apr 16, 98	Ø0.157/0.155 added Modified further to typing error Ø0.089/0.081 and Ø0.068/0.081	Valgresy B	Giet L
APPR.:				

Confidential information not to be disclosed to third parties without Radiall approval
This information is given as an indication.In the continual goal to improve our products,we reserve the right to make any modifications judged necessary.

4112_9311

RADIALL PROPRIETARY INFORMATION