Technical Data Sheet

TORQUE DRIVER FOR SMP LIMITED DETENT TORQUE 90 N/CM

PAGE **1/1**	ISSUE **12-07-16A**	SERIES **OUT**	PART NUMBER **R282339005**

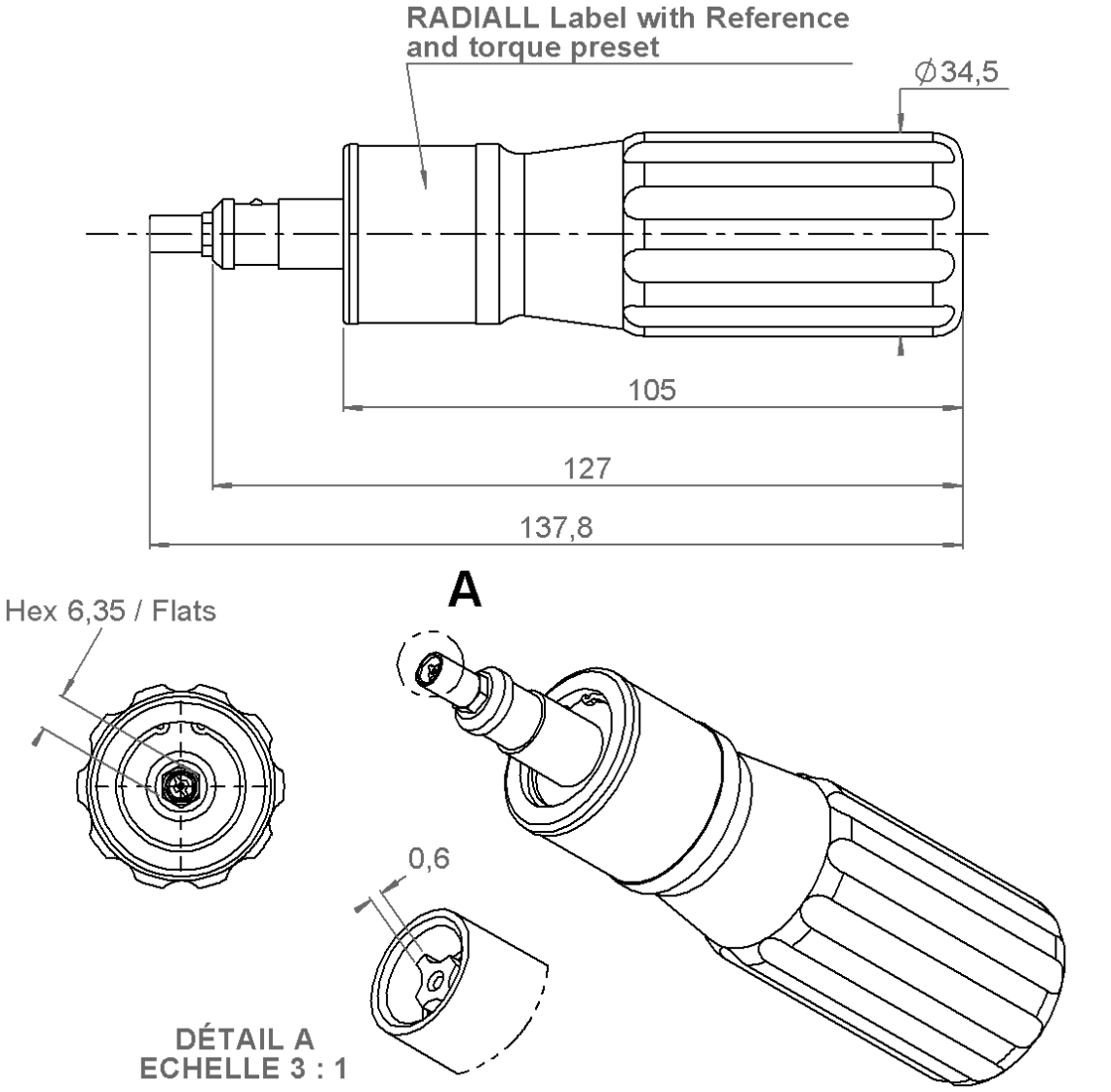

All dimensions are in mm.

This document contains proprietary information and such information shall not be disclosed to any third party for any purpose whatsoever or used for manufacturing purposes without prior written agreement from Radiall. The data defined in this document are given as an indication, in the effort to improve our products; we reserve the right to make any changes judged necessary.