RADIALL® MULTICONTACT CONNECTORS	TECHNICAL DATA SHEET	RP 2799
Series NSX	SIZE 1 COAXIAL CONTACT - WIRING INSTRUCTIONS FOR E-0406WD CABLE	Issue: Apr. 22, 16 — Page 1 / 1

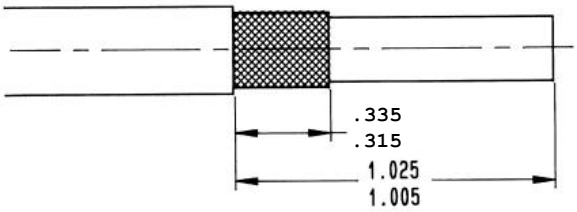

STEP 1
STRIP CABLE JACKET TO DIMENSIONS SHOWN

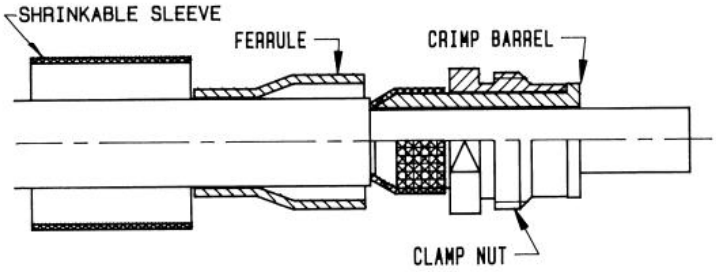

STEP 2
SLIDE FERRULE AND THE SHRINKABLE SLEEVE OVER THE CABLE FLARE BRAID
SLIDE CRIMP BARREL FITTED WITH CLAMP NUT OVER DIELECTRIC AND PLACE BRAID ON KNURLED AREA

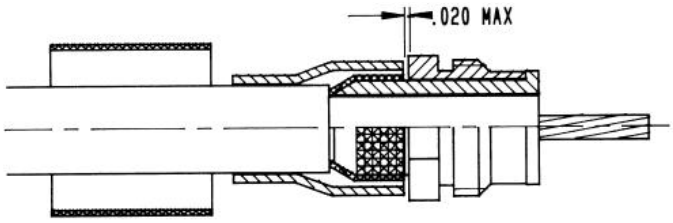

STEP 3
SLIDE FERRULE OVER BRAID MAINTENING A GAP BETWEEN FERRULE AND CLAMP NUT. CRIMP FERRULE USING:
CRIMPING TOOL M22520/5-01 (RADIALL 282293)
DIE M22520/5-61 (RADIALL 282247)

BE SURE THAT CLAMP NUT REMAINS TO ROTATE THEN TRIM DIELECTRIC

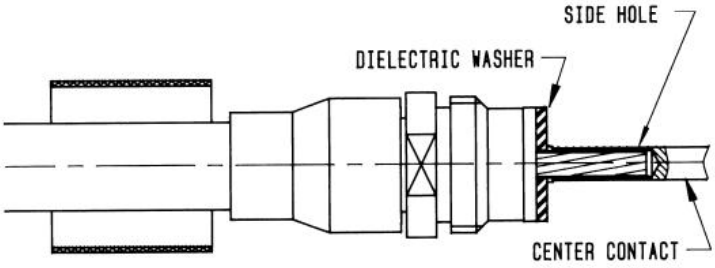

STEP 4
SLIDE DIELECTRIC WASHER OVER CENTER CONDUCTOR THEN CENTER CONTACT. CRIMP CENTER CONTACT USING:
CRIMPING TOOL M22520/1-01 (RADIALL 282291)
SELECTOR 8
POSITIONER M22520/1-13 (RADIALL 282997) GREEN

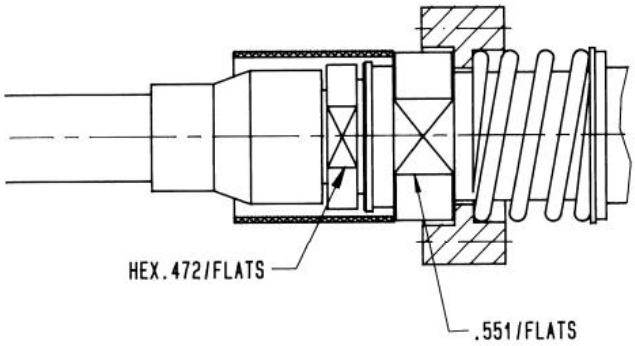

STEP 5
INTRODUCE THE CABLE INTO THE OUTER CONTACT SCREW AND TIGHTEN THE CLAMP NUT WITH 32 IN-LBS TORQUE

SLIDE THE SHRINKABLE SLEEVE AGAINST THE CONTACT SHOULDER THEN SHRINK

CREATION				
PEN:				
NOM: BALDYROU				
DATE: 8 FEB.95	Apr.22,16	Add tolerances dimensions	Branjonneau	Legendre
APPR. VALGRESY	Issue	Revisions	Name	Approved